SONY®

HD VIDEOCASSETTE RECORDER

HDV-10

HDVS UNIHI

MAINTENANCE MANUAL

Volume 2 1st Edition(Revised 5)

Serial No. 10001 and Higher

SAFETY CHECK-OUT

(Only for USA)

After correcting the original service problem, perform the following safety checks before releasing the set to the customer:

Check the metal trim, "metallized" knobs, screws, and all other exposed metal parts for AC leakage. Check leakage as described below.

LEAKAGE TEST

The AC leakage from any exposed metal part to earth ground and from all exposed metal parts to any exposed metal part having a return to chassis, must not exceed 3.5 mA. Leakage current can be measured by any one of three methods.

1. A commercial leakage tester, such as the Simpson 229 or RCA WT-540A. Follow the manufacturers' instructions to use these instruments.
2. A battery-operated AC milliammeter. The Data Precision 245 digital multimeter is suitable for this job.
3. Measuring the voltage drop across a resistor by means of a VOM or battery-operated AC voltmeter. The "limit" indication is 5.25V, so analog meters must have an accurate low-voltage scale. The Simpson 250 and Sanwa SH-63Trd are examples of a passive VOM that is suitable. Nearly all battery operated digital multimeters that have a 20V AC range are suitable. (See Fig. A)

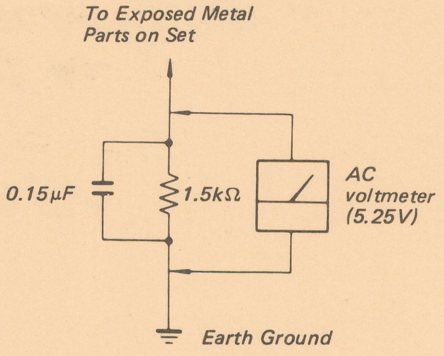

Fig. A. Using an AC voltmeter to check AC leakage.

このマニュアルに記載されている事柄の著作権は当社にあり，説明内容は機器購入者の使用を目的としています。
従って，当社の許可なしに無断で複写したり，説明内容（操作，保守等）と異なる目的で本マニュアルを使用することを禁止します。

The material contained in this manual consists of information that is the property of Sony Corporation and is intended solely for use by the purchasers of the equipment described in this manual.
Sony Corporation expressly prohibits the duplication of any portion of this manual or the use thereof for any purpose other than the operation or maintenance of the equipment described in this manual without the express written permission of Sony Corporation.

Le matériel contenu dans ce manuel consiste en informations qui sont la propriété de Sony Corporation et sont destinées exclusivement à l'usage des acquéreurs de l'équipement décrit dans ce manuel.
Sony Corporation interdit formellement la copie de quelque partie que ce soit de ce manuel ou son emploi pour tout autre but que des opérations ou entretiens de l'équipement à moins d'une permission écrite de Sony Corporation.

Das in dieser Anleitung enthaltene Material besteht aus Informationen, die Eigentum der Sony Corporation sind, und ausschließlich zum Gebrauch durch den Käufer der in dieser Anleitung beschriebenen Ausrüstung bestimmt sind.
Die Sony Corporation untersagt ausdrücklich die Vervielfältigung jeglicher Teile dieser Anleitung oder den Gebrauch derselben für irgendeinen anderen Zweck als die Bedienung oder Wartung der in dieser Anleitung beschriebenen Ausrüstung ohne ausdrückliche schriftliche Erlaubnis der Sony Corporation.

目　次
TABLE OF CONTENTS

Volume-1

1. 設置
2. サービスインフォメーション
3. 自己診断機能
4. 治工具および測定器
5. 定期点検表
6. 点検および保守
7. 主要部品の交換
8. テープ走行系調整
9. 電気系調整のための一般情報
10. 電源調整
11. ファンクションコントロールパネル調整
12. サーボ系調整
13. CUE・TC・CTL系調整
14. RF信号系調整
15. ビデオ信号系調整
16. オーディオ信号系調整
17. 回路説明

(17章は追加版にて近日発行)

1. **INSTALLATION**
2. **SERVICE INFORMATION**
3. **SELF DIAGNOSTIC FUNCTION**
4. **TOOLS AND MEASURING INSTRUMENTS**
5. **INSPECTION AND MAINTENANCE**
6. **PERIODIC CHECK AND MAINTENANCE**
7. **MAIN PART REPLACEMENT**
8. **TAPE RUNNING SYSTEM ALIGNMENT**
9. **GENERAL INFORMATION FOR ELECTRICAL ALIGNMENT**
10. **POWER SUPPLY ALIGNMENT**
11. **FUNCTION CONTROL PANEL ALIGNMENT**
12. **SERVO SYSTEM ALIGNMENT**
13. **CUE, TC, CTL SIGNAL SYSTEM ALIGNMENT**
14. **RF SIGNAL SYSTEM ALIGNMENT**
15. **VIDEO SIGNAL SYSTEM ALIGNMENT**
16. **AUDIO SIGNAL SYSTEM ALIGNMENT**
17. **THEORY OF OPERATION**

(Section17 will be available as a supplement)

Volume-2

18. BLOCK DIAGRAM

OVERALL (1／2) ········· 18-3
  Video Audio Signal System
OVERALL (2／2) ········· 18-4
  Servo System Control
DM-77 Board ········· 18-5
  PB Head EQ
MD-65／RE-70 Boards ········· 18-6
  FM Modulator／Rec, Erase Head Amp
IPR-1 Board ········· 18-7
  Video A／D, TCI Convert, D／A
TBC-14 Board ········· 18-8
  Video A／D Convert, Wrire CK GEN
TBC-15 Board ········· 18-9
  TCI Reconvert, Line TBC
SG-169 Board ········· 18-10
  Video Clock GEN.
IV-23, SMB-8, IO-43/44/53 Boards ········· 18-11
  Video Input／Output
ADA-14 Board ········· 18-12
  Audio A／D, D／A CONV.
DEC-50 Board ········· 18-13
  Audio DEC, Error Correction
ENC-12 Board ········· 18-14
  Audio ENC, Parity GEN.
ED-23 Board ········· 18-15
  Audio／SYS／Servo CK GEN.
  Audio Data Bus Control & Diagnosis
AE-08 Board ········· 18-16
  CUE, TC, CTL REC／PB AMP
  Erase Head Amp
SV-116 Board ········· 18-17
  Servo Main
RM-68 Board & TM-31 Board ········· 18-18
  Servo Sub Control, Sensor Interface
SY-144 Board ········· 18-19
  System Control
IF-241 Board ········· 18-20
  Remote-1／2A／2B, VA Control
LEVEL CONTROL ········· 18-21
  DP-105, SW-352, VR-91／92／92A
CONTROL PANEL ········· 18-22
  KC-14, KY-189, DP-106, EN-55, DET-3
POWER SUPPLY ········· 18-23
  AC-100, PC-56／57, PS-187／190

19. SCHEMATIC DIAGRAM

HEAD DRUM

DR-90 Board ········· 19-3
  PB Head AMP
DR-126 Board ········· 19-3
  Brush Assy
DR-127 Board ········· 19-3
  Flange Assy
DR-128 Board ········· 19-3
  Stator Assy

RF

DM-77 A／B Board ········· 19-5
  PB Head EQ
MD-65 Board ········· 19-9
  Modulator, RF Switch
RE-70 Board ········· 19-13
  REC／ERASE Head AMP

DIGITAL VIDEO PROCESS

IPR-1 Board ········· 19-15
  Video A／D, TCI Convert, D／A
TBC-14 Board ········· 19-29
  Video A／D Convert, Write CK GEN
TBC-15 Board ········· 19-35
  TCI Reconvert, Line TBC
SG-169 Board ········· 19-51
  Video Clock GEN

VIDEO

IV-23 Board ········· 19-57
  Input AGC／Matrix, Wave Form

DIGITAL AUDIO PROCESS

ADA-14 Board ········· 19-61
  Audio A／D, D／A CONV
DEC-50 Board ········· 19-73
  Audio DEC, Error Correction
ENC-12 Board ········· 19-85
  Audio ENC, Parity GEN
ED-23 Board ········· 19-91
  Audio／SYS／Servo CK GEN
  Audio Data Bus Control & Diagnosis

AUDIO & LONGITUDE

AE-08 Board ········· 19-99
  CUE, TC, CTL REC／PB AMP
  Erase Head AMP

SERVO

SV-116 Board ········ 19-103
  Servo Main
RM-68 Board & TM-31 Board ········ 19-111
  Servo Sub Control, Sensor Interface

SYSCON

SY-144 Board ········ 19-115
  System Control
IF-241 Board ········ 19-125
  Remote – 1, 2A, 2B, VA Control

LEVEL CONTROL

VR-91 Board ········ 19-127
  Video Level Control
VR-92 Board ········ 19-129
  Audio REC VR
VR-92A Board ········ 19-129
  Audio PB VR
DP-105 Board ········ 19-131
  Audio Level Meter
SW-352 Board ········ 19-133
  Audio Monitor Select

FUNCTION CONTROL

KY-189 Board ········ 19-135
  Main Key
KC-14 Board ········ 19-135
  Key Control
DP-106 Board ········ 19-135
  Sub Key
EN-55 Board ········ 19-135
  Entry Key
DET-3 Board ········ 19-135
  Search Dial Detector

CONNECTOR PANEL

IO-43 Board ········ 19-139
  Video/Sync Input Buffer
IO-44 Board ········ 19-141
  Video/Sync Output Buffer
IO-53 Board ········ 19-143
  Character Mix, Video Monitor Out
IO-45 Board ········ 19-145
  Audio Analog IN/OUT
IO-45A Board ········ 19-145
  Audio Monitor R OUT
IO-46 Board ········ 19-147
  Audio Digital, TC, CUE IN/OUT
IO-46A Board ········ 19-147
  Monitor L OUT
VR-93 Board ········ 19-149
  Headphone/Remote Jack

POWER

PS-187 Board ········ 19-151
  Rectifier
PC-56 Board ········ 19-153
  + 5V (D), + 5V (A), + 15V, SW REG
PC-57 Board ········ 19-151
  – 5V, + 12V, – 12V, SW REG
AC-100 Board ········ 19-151
  AC Line Filter
PS-190 Board ········ 19-153
  Power SW

MOTHER

MB-247 Board ········ 19-155
  Card Rack 1,2

SUB MOTHER

SMB-7 Board ········ 19-163
  Card Rack 3
SMB-8 Board ········ 19-169
  Connector Panel Mother

FRAME

CASSETTE COMPARTMENT ········ 19-173
  CL-21 ; Casse Com, Connection
  LMP-5 ; Casse Com, Indicator
  PC-17 ; Casse IN/DOWN/UP Sensor
  TE-2 ; Tape END/TOP Sensor

TTP ········ 19-173
  SW-435 ; Casse Com, Switch
  TR-58 ; Tension Sensor
  PC-17 ; Unthread End Detect
  SE-117 ; Tape (END/TOP) Sensor Radiation
  PD-35 ; Press Pinch
LEVEL/REMOTE CONTROL ········ 19-175
FUNCTION CONTROL PANEL ········ 19-177
CONNECTOR PANEL ········ 19-179
POWER SUPPLY ········ 19-181

Volume-3

20. BOARD LAYOUT

21. SEMICONDUCTOR PIN ASSIGNMENT

22. REPLACEABLE PART

23. CHANGED PART

SECTION 18

BLOCK DIAGRAM

	Board	Function	Page
A	ADA-14	Audio A/D, D/A Converter	18-12
	AE-08	Audio & Longitude	18-16
C	CONTROL PANEL	Function Control	18-22
D	DEC-50	Audio Decoder	18-13
	DM-77	RF Amp, FM Demodurator	18-5
E	ED-23	Audio Data Bus Control	18-15
	ENC-12	Audio Encoder	18-14
I	IF-241	Remote Control Interface	18-20
	IPR-1	Digital Video Process	18-7
L	LEVEL CONTROL	Video Audio Level Control	18-21
M	MD-65/RE-70	FM Modulator/Rec, Erase Head Amp	18-6
O	OVERALL (1/2)	Servo System Control Overall	18-3
	OVERALL (2/2)	Video Audio Signal System Overall	18-4
P	POWER SUPPLY	Power	18-23
R	RM-68	Servo Sub Control	18-18
S	SG-169	Video Clock Generator.	18-10
	SV-116	Servo Control	18-17
	SY-144	System Control	18-19
T	TBC-14	Video A/D Converter, Write Clock Generator	18-8
	TBC-15	Digital Video Process	18-9
V	VIDEO INPUT/OUTPUT	Video IN/OUT Interface	18-11

BLOCK CONSTRUCTION

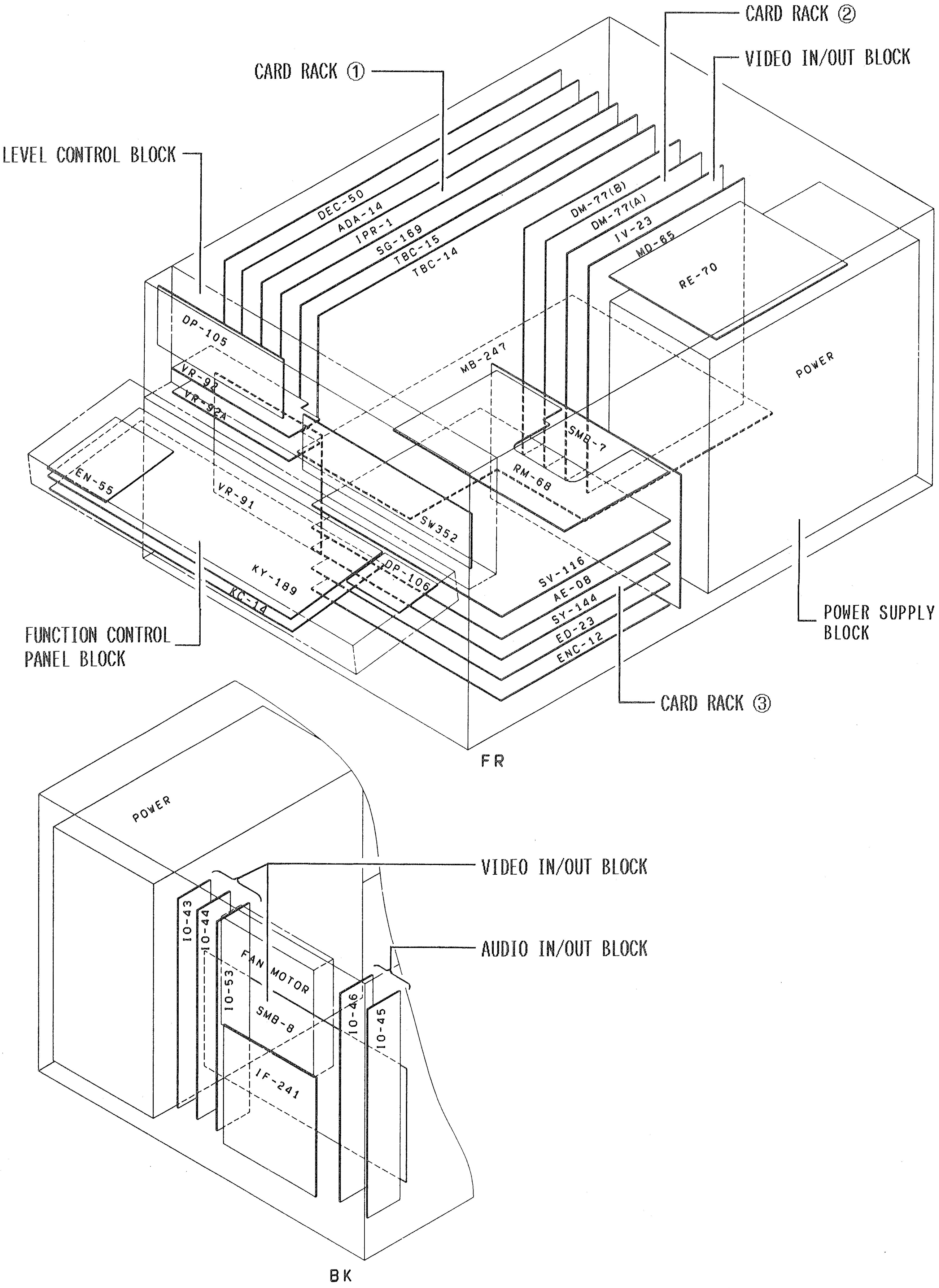
CARD RACK ②
VIDEO IN/OUT BLOCK
CARD RACK ①
LEVEL CONTROL BLOCK
DEC-50
ADA-14
IPR-1
SG-169
TBC-15
TBC-14
DM-77(B)
DM-77(A)
IV-23
MD-65
RE-70
POWER
DP-105
VR-92
VR-92A
MB-247
SMB-7
RM-68
EN-55
VR-91
SW352
DP-106
KY-189
KC-14
SV-116
AE-08
SY-144
ED-23
ENC-12
FUNCTION CONTROL PANEL BLOCK
POWER SUPPLY BLOCK
CARD RACK ③
FR
POWER
VIDEO IN/OUT BLOCK
AUDIO IN/OUT BLOCK
IO-43
IO-44
FAN MOTOR
IO-53
SMB-8
IO-46
IO-45
IF-241
BK

VIDEO IN
CN601,602 Y/G
CN603,604 PB/B
CN605,606 PR/R
CN607,608 EXT SYNC
TERMINATER
IO-43
AGC AMP
MATRIX
Y PROCESS
CHROMA PROCESS
IV-23
A/D
Y DELAY MEMORY
CHROMA VERTICAL FILTER
CHROMA SCRAMBLE
CLOCK SHIFTER
FRAME MEMORY
MEMORY CONTROL
TEST SG
D/A
IPR-1
NON LINEAR EMPHASIS
MODULATOR
VIDEO / AUDIO RF SWITCH
AUDIO RF AMP
REC LOGIC
MD-65
RA REC AMP
RB REC AMP
ERASE AMP
RE-70
HEAD DRUM
REC HEAD
ERASE HEAD
AUDIO PB HEAD
VIDEO PB HEAD
DR-90
DR-127
DR-128
DR-126
ROTARY TRANSFOMER
SLIP RING BRUSH
TO SV-116
V-RF EQ. A-EQ.CONT
DEMOD
NON LINEAR
REF FREQ CONT
SYNC SEP
DM-77A (CHANNEL A)
DM-77B (CHANNEL B)
SAME AS CHANNEL A
WCK OSC
REF FREQ GEN
TBC-14
TO SG-169
TBC
RE CONVERT TCI
DOC
MEMORY CONTROL
TBC-15
MATRIX
Y/G PROCESS
PB/B PROCESS
PR/R PROCESS
SYNC AGC
VIDEO OUT
IO-44
CHARA MIX
VIDEO MONITOR OUT
SMB-8
IO-53
From AE-08
WFM SELECTOR
WFM BUS
REF H-V GEN
REF TCI H-V GEN
PB LOGIC
SYSTEM H-V GEN
CHROMA PHASE PLL
VELOERR PLL
TRI SYNC GEN
CPU INTERFACE
LEVEL CONTROL
MODE CONTROL
REF FREQ PLL
CHARACTER GEN
SG-169
FROM RM-68
FROM TBC-15
TO/FROM SERVO-SYSTEM CONTROL BLOCK
AUDIO BUS DIAGNOSTICS
EDIT MEMORY
ADSP
COEFFICIENT MEMORY
ALU
H SYNC PLL
VCXO
AUDIO ADDRESS GENERATOR
ED-23
PARITY GENERATOR
8/14 MODULATOR
P-S CONV
ENC-12
S-P CONV
14/8 DEMOD
TBC MEMORY
PLL
ERROR CORRECTION
DEC-50
AUDIO ANALOG IN
IO-45(1/2)
AUDIO DIGITAL IN
AUDIO DIGITAL OUT
RX/TX
IO-46(1/3)
TO IF-241
GAIN CONTROL
ATT
CH-1
CH-2
CH-3
CH-4
AUDIO BUS I/O
DIGITAL FILTER
DIGITAL AUDIO I/O
AUDIO PEAK METER
D/A
LPF
BALANCE AMP
4/2 SELECTOR
MONITOR L
MONITOR R
ADA-14
AUDIO ANALOG OUT
IO-45(2/2)
IO-46(2/3)
TO AE-08
FROM AE-08
PHONES LEVEL
PHONES OUT
SIRCS IN
TO SY-144
VR-93
SYSTEM BUS
AUDIO BUS

Video/Audio Signal System

OVERALL BLOCK DIAGRAM (1/2)

HDV-10(J) ;f10001-
HDV-10(UC) ;f10001-
HDV-10(EK) ;f10001-

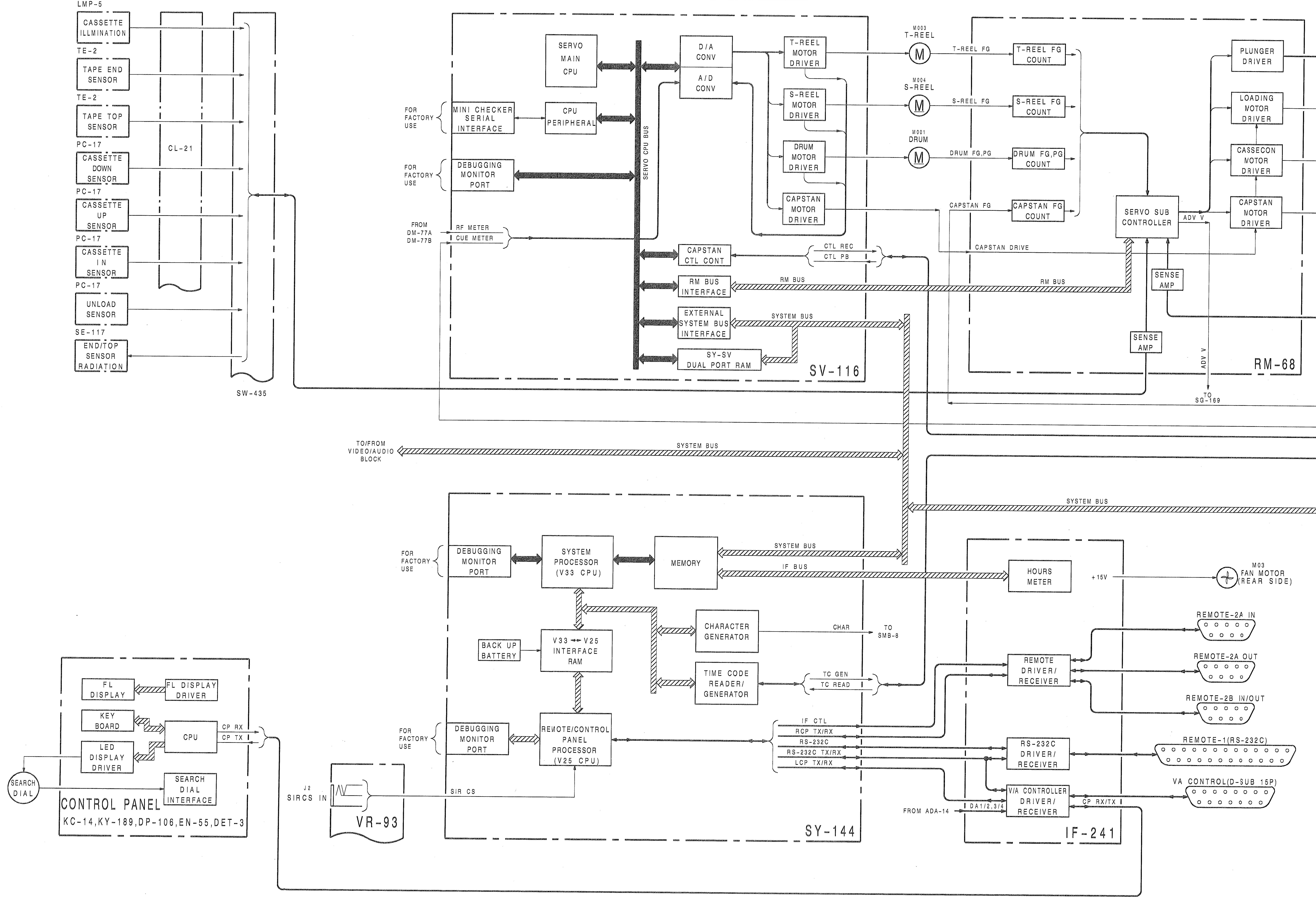
LMP-5
CASSETTE ILLMINATION
TE-2
TAPE END SENSOR
TE-2
TAPE TOP SENSOR
PC-17
CASSETTE DOWN SENSOR
PC-17
CASSETTE UP SENSOR
PC-17
CASSETTE IN SENSOR
PC-17
UNLOAD SENSOR
SE-117
END/TOP SENSOR RADIATION
CL-21
SW-435
FOR FACTORY USE
MINI CHECKER SERIAL INTERFACE
DEBUGGING MONITOR PORT
FROM DM-77A DM-77B
RF METER
CUE METER
SERVO MAIN CPU
CPU PERIPHERAL
SERVO CPU BUS
D/A CONV
A/D CONV
CAPSTAN CTL CONT
RM BUS INTERFACE
EXTERNAL SYSTEM BUS INTERFACE
SY-SV DUAL PORT RAM
SV-116
T-REEL MOTOR DRIVER
S-REEL MOTOR DRIVER
DRUM MOTOR DRIVER
CAPSTAN MOTOR DRIVER
M003 T-REEL
M004 S-REEL
M001 DRUM
T-REEL FG
S-REEL FG
DRUM FG,PG
CAPSTAN FG
T-REEL FG COUNT
S-REEL FG COUNT
DRUM FG,PG COUNT
CAPSTAN FG COUNT
CAPSTAN DRIVE
CTL REC
CTL PB
RM BUS
SYSTEM BUS
SERVO SUB CONTROLLER
ADV V
SENSE AMP
SENSE AMP
TO SG-189
PLUNGER DRIVER
LOADING MOTOR DRIVER
CASSECON MOTOR DRIVER
CAPSTAN MOTOR DRIVER
RM-68
PM002 T-REEL BRAKE
PM001 S-REEL BRAKE
PD-35
PM003 CAPSTAN PINCH
M005 LOADING
SW-435
CL-21
M006 CASSETTE COMPARTMENT
M054 CAPSTAN
CAPSTAN FG
TENSION SENSOR
TR-58
CS001 DEW SENSOR
PM004 THREADING RING POTENTIOMETER
TO/FROM VIDEO/AUDIO BLOCK
SYSTEM BUS
FOR FACTORY USE
DEBUGGING MONITOR PORT
SYSTEM PROCESSOR (V33 CPU)
MEMORY
SYSTEM BUS
IF BUS
HOURS METER
+15V
M03 FAN MOTOR (REAR SIDE)
BACK UP BATTERY
V33 ⟷ V25 INTERFACE RAM
CHARACTER GENERATOR
CHAR
TO SMB-8
TIME CODE READER/ GENERATOR
TC GEN
TC READ
FOR FACTORY USE
DEBUGGING MONITOR PORT
REMOTE/CONTROL PANEL PROCESSOR (V25 CPU)
IF CTL
RCP TX/RX
RS-232C
RS-232C TX/RX
LCP TX/RX
SY-144
REMOTE DRIVER/ RECEIVER
RS-232C DRIVER/ RECEIVER
VA CONTROLLER DRIVER/ RECEIVER
FROM ADA-14
DA1/2,3/4
CP RX/TX
IF-241
REMOTE-2A IN
REMOTE-2A OUT
REMOTE-2B IN/OUT
REMOTE-1(RS-232C)
VA CONTROL(D-SUB 15P)
FL DISPLAY
FL DISPLAY DRIVER
KEY BOARD
CPU
LED DISPLAY DRIVER
SEARCH DIAL INTERFACE
SEARCH DIAL
CP RX
CP TX
CONTROL PANEL
KC-14,KY-189,DP-106,EN-55,DET-3
J2 SIRCS IN
SIR CS
VR-93

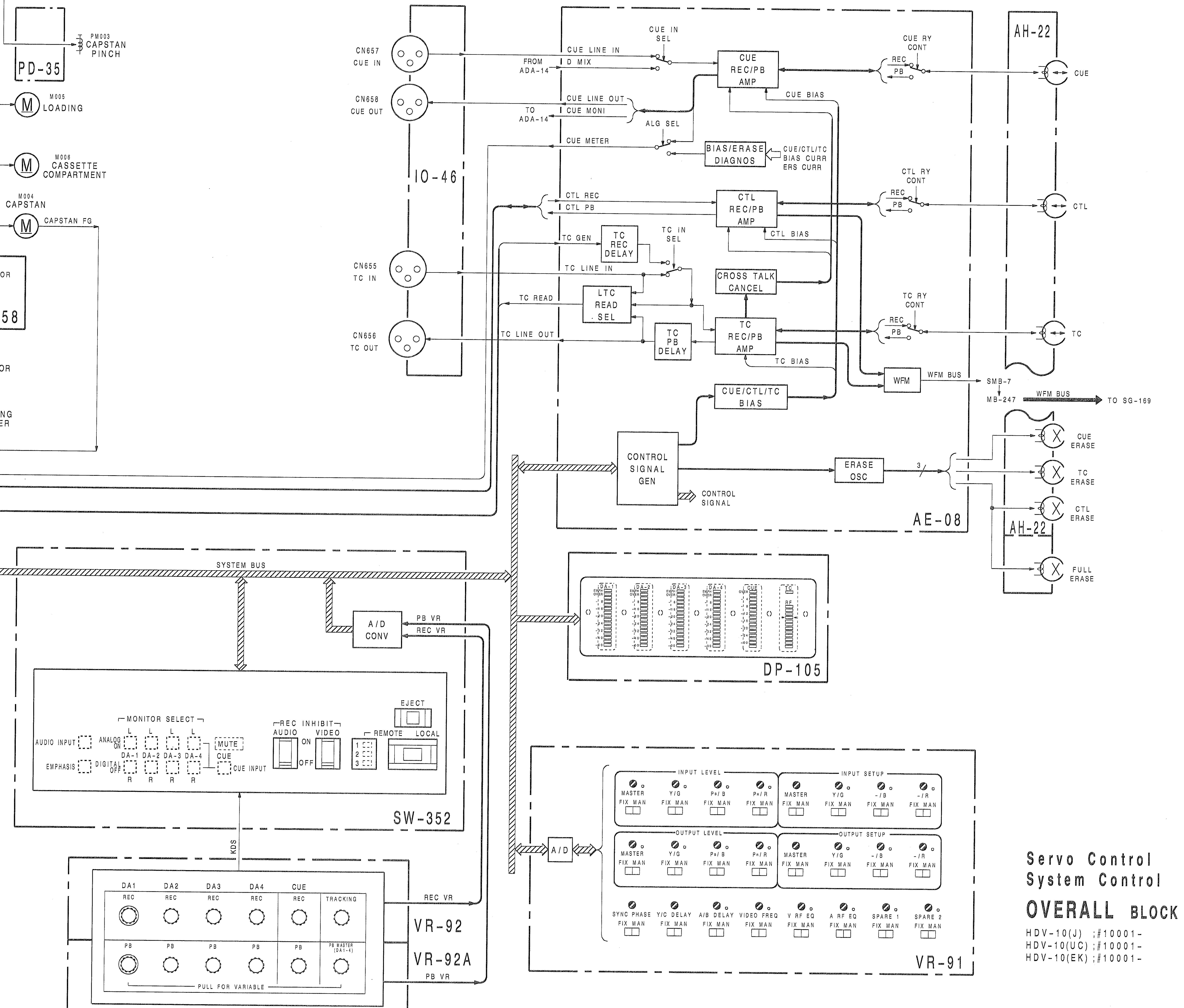
CN657 CUE IN
CN658 CUE OUT
CN655 TC IN
CN656 TC OUT
IO-46
CUE IN SEL
CUE LINE IN
FROM ADA-14
D MIX
CUE LINE OUT
TO ADA-14
CUE MONI
ALG SEL
CUE METER
CUE REC/PB AMP
CUE BIAS
BIAS/ERASE DIAGNOS
CUE/CTL/LTC BIAS CURR ERS CURR
CTL REC
CTL PB
CTL REC/PB AMP
CTL BIAS
TC GEN
TC REC DELAY
TC IN SEL
TC LINE IN
CROSS TALK CANCEL
TC READ
LTC READ SEL
TC LINE OUT
TC PB DELAY
TC REC/PB AMP
TC BIAS
CUE/CTL/LTC BIAS
WFM
WFM BUS
SMB-7
MB-247
TO SG-169
CONTROL SIGNAL GEN
CONTROL SIGNAL
ERASE OSC
AE-08
CUE RY CONT
REC
PB
CTL RY CONT
TC RY CONT
AH-22
CUE
CTL
TC
CUE ERASE
TC ERASE
CTL ERASE
FULL ERASE
AH-22
SYSTEM BUS
SYSTEM BUS
DP-105
A/D CONV
PB VR
REC VR
MONITOR SELECT
AUDIO INPUT
ANALOG
DIGITAL
EMPHASIS
ON
OFF
DA-1
DA-2
DA-3
DA-4
L
R
MUTE
CUE
CUE INPUT
REC INHIBIT
AUDIO
VIDEO
ON
OFF
REMOTE
LOCAL
EJECT
SW-352
MOD
DA1
DA2
DA3
DA4
CUE
REC
TRACKING
PB
PB MASTER
PULL FOR VARIABLE
REC VR
VR-92
VR-92A
PB VR
A/D
INPUT LEVEL
INPUT SETUP
MASTER
Y/G
Pr/B
Pr/R
-/B
-/R
FIX MAN
OUTPUT LEVEL
OUTPUT SETUP
SYNC PHASE
Y/C DELAY
A/B DELAY
VIDEO FREQ
V RF EQ
A RF EQ
SPARE 1
SPARE 2
VR-91

Servo Control
System Control

OVERALL BLOCK DIAGRAM (2/2)

HDV-10(J) :10001-
HDV-10(UC) :10001-
HDV-10(EK) :10001-

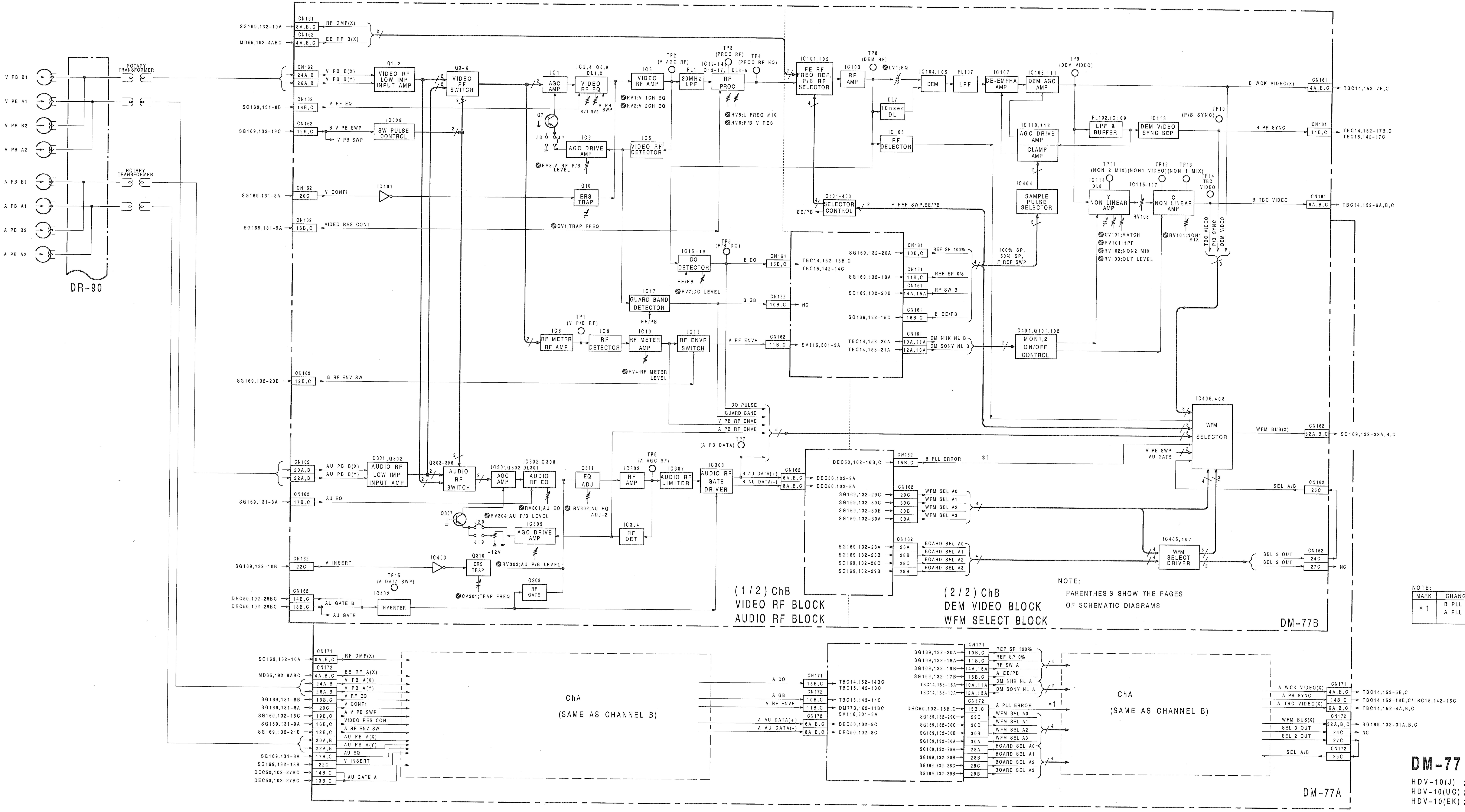
DR-90
V PB B1
V PB A1
V PB B2
V PB A2
A PB B1
A PB A1
A PB B2
A PB A2
ROTARY TRANSFORMER
CN161
CN162
RF DMF(X)
EE RF B(X)
V PB B(X)
V PB B(Y)
Q1,2 VIDEO RF LOW IMP INPUT AMP
Q3-6 VIDEO RF SWITCH
IC1 AGC AMP
IC2,4 Q8,9 DL1,2 VIDEO RF EQ
IC3 VIDEO RF AMP
FL1 20MHz LPF
IC12-14 Q13-17, DL3-5 RF PROC
TP2 (V AGC RF)
TP3 (PROC RF)
TP4 (PROC RF EQ)
RV1;V 1CH EQ
RV2;V 2CH EQ
RV5;L FREQ MIX
RV6;P/B V RES
IC6 AGC DRIVE AMP
IC5 VIDEO RF DETECTOR
RV3;V RF P/B LEVEL
V RF EQ
IC309 SW PULSE CONTROL
B V PB SWP
V PB SWP
V CONFI
IC401
Q10 ERS TRAP
CV1;TRAP FREQ
VIDEO RES CONT
IC101,102 EE RF FREQ REF. P/B RF SELECTOR
IC103 RF AMP
TP8 (DEM RF)
LV1;EQ
IC104,105 DEM
FL107 LPF
IC107 DE-EMPHA AMP
IC108,111 DEM AGC AMP
TP9 (DEM VIDEO)
DL7 10nsec DL
IC106 RF DELECTOR
IC110,112 AGC DRIVE AMP CLAMP AMP
FL102,IC109 LPF & BUFFER
IC113 DEM VIDEO SYNC SEP
TP10 (P/B SYNC)
B WCK VIDEO(X)
B PB SYNC
B TBC VIDEO
TBC14,153-7B,C
TBC14,152-17B,C TBC15,142-17C
TBC14,152-6A,B,C
IC404 SAMPLE PULSE SELECTOR
TP11 (NON 2 MIX)
TP12 (NON1 VIDEO)
TP13 (NON 1 MIX)
TP14 TBC VIDEO
IC114 DL8 Y NON LINEAR AMP
IC115-117 C NON LINEAR AMP
RV103
CV101;MATCH
RV101;HPF
RV102;NON2 MIX
RV103;OUT LEVEL
RV104;NON1 MIX
IC401-403 SELECTOR CONTROL
EE/PB
F REF SWP,EE/PB
TP5 (P/B DO)
IC15-19 DO DETECTOR
RV7;DO LEVEL
IC17 GUARD BAND DETECTOR
B DO
B GB
NC
TBC14,152-15B,C TBC15,142-14C
SG169,132-20A
SG169,132-18A
SG169,132-20B
SG169,132-15C
REF SP 100%
REF SP 0%
RF SW B
B EE/PB
100% SP, 50% SP, F REF SWP
TP1 (V P/B RF)
IC8 RF METER RF AMP
IC9 RF DETECTOR
IC10 RF METER AMP
IC11 RF ENVE SWITCH
RV4;RF METER LEVEL
V RF ENVE
SV116,301-3A
TBC14,153-20A
TBC14,153-21A
DM NHK NL B
DM SONY NL B
IC401,Q101,102 MON1,2 ON/OFF CONTROL
B RF ENV SW
DO PULSE
GUARD BAND
V PB RF ENVE
A PB RF ENVE
IC406,408 WFM SELECTOR
WFM BUS(X)
SG169,132-32A,B,C
V PB SWP
AU GATE
(A PB DATA) TP7
DEC50,102-16B,C
B PLL ERROR *1
SEL A/B
AU PB B(X)
AU PB B(Y)
Q301,Q302 AUDIO RF LOW IMP INPUT AMP
Q303-306 AUDIO RF SWITCH
IC301,Q302 AGC AMP
IC302,Q308, DL301 AUDIO RF EQ
Q311 EQ ADJ
TP6 (A AGC RF)
IC303 RF AMP
IC307 AUDIO RF LIMITER
IC308 AUDIO RF GATE DRIVER
B AU DATA(+)
B AU DATA(-)
DEC50,102-9A
DEC50,102-8A
AU EQ
Q307
RV301;AU EQ
RV304;AU P/B LEVEL
RV302;AU EQ ADJ-2
IC305 AGC DRIVE AMP
IC304 RF DET
-12V
V INSERT
IC403
Q310 ERS TRAP
RV303;AU P/B LEVEL
CV301;TRAP FREQ
TP15 (A DATA SWP)
IC402 INVERTER
Q309 RF GATE
AU GATE B
AU GATE
SG169,132-29C
SG169,132-30C
SG169,132-30B
SG169,132-30A
WFM SEL A0
WFM SEL A1
WFM SEL A2
WFM SEL A3
SG169,132-28A
SG169,132-28B
SG169,132-28C
SG169,132-29B
BOARD SEL A0
BOARD SEL A1
BOARD SEL A2
BOARD SEL A3
IC405,407 WFM SELECT DRIVER
SEL 3 OUT
SEL 2 OUT
(1/2) ChB VIDEO RF BLOCK AUDIO RF BLOCK
(2/2) ChB DEM VIDEO BLOCK WFM SELECT BLOCK
DM-77B
CN171
CN172
ChA (SAME AS CHANNEL B)
A DO
A GB
V RF ENVE
A AU DATA(+)
A AU DATA(-)
TBC14,152-14B,C TBC15,142-13C
TBC15,143-14C
DM77B,162-11C SV116,301-3A
DEC50,102-9C
DEC50,102-8C
A PLL ERROR *1
A WCK VIDEO(X)
A PB SYNC
A TBC VIDEO(X)
TBC14,153-5B,C
TBC14,152-16B,C/TBC15,142-16C
TBC14,152-4A,B,C
SG169,132-31A,B,C
DM-77A

NOTE;
PARENTHESIS SHOW THE PAGES
OF SCHEMATIC DIAGRAMS

NOTE:

MARK	CHANGE INFORMATION	SERIAL NO.
*1	B PLL ERROR A PLL ERROR ADDED	#10401-

DM-77 BLOCK DIAGRAM

HDV-10(J) ;#10001-
HDV-10(UC) ;#10001-
HDV-10(EK) ;#10001-

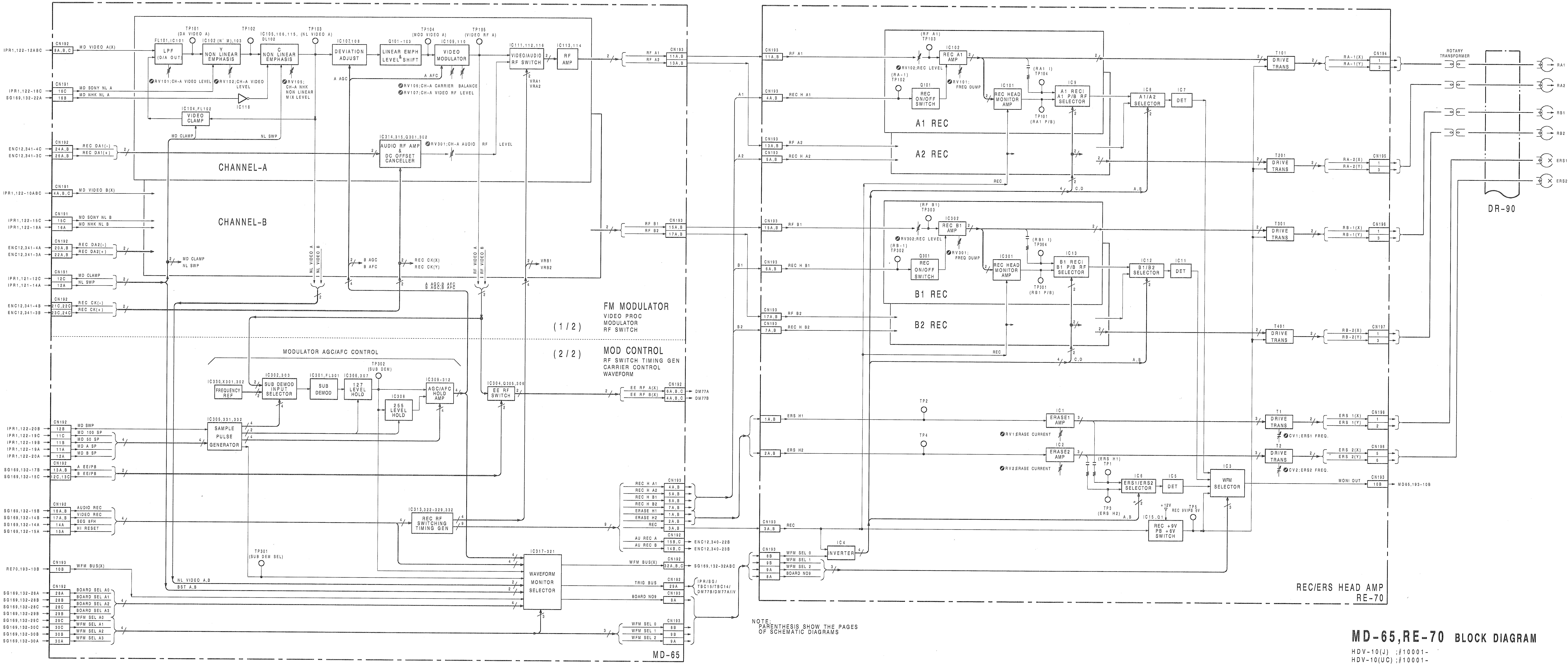
CHANNEL-A
CHANNEL-B
LPF (D/A OUT)
Y NON LINEAR EMPHASIS
C NON LINEAR EMPHASIS
DEVIATION ADJUST
LINEAR EMPH LEVEL & SHIFT
VIDEO MODULATOR
VIDEO/AUDIO RF SWITCH
RF AMP
VIDEO CLAMP
AUDIO RF AMP & DC OFFSET CANCELLER
FM MODULATOR
VIDEO PROC
MODULATOR
RF SWITCH
(1/2)
(2/2)
MOD CONTROL
RF SWITCH TIMING GEN
CARRIER CONTROL
WAVEFORM
MODULATOR AGC/AFC CONTROL
FREQUENCY REF
SUB DEMOD INPUT SELECTOR
SUB DEMOD
127 LEVEL HOLD
255 LEVEL HOLD
AGC/AFC HOLD AMP
EE RF SWITCH
SAMPLE PULSE GENERATOR
REC RF SWITCHING TIMING GEN
WAVEFORM MONITOR SELECTOR
MD-65
A1 REC
A2 REC
B1 REC
B2 REC
REC A1 AMP
REC ON/OFF SWITCH
REC HEAD MONITOR AMP
A1 REC/ A1 P/B RF SELECTOR
A1/A2 SELECTOR
DET
REC B1 AMP
B1 REC/ B1 P/B RF SELECTOR
B1/B2 SELECTOR
DRIVE TRANS
ERASE1 AMP
ERASE2 AMP
ERS1/ERS2 SELECTOR
WFM SELECTOR
REC +9V PB +6V SWITCH
INVERTER
ROTARY TRANSFORMER
RA1
RA2
RB1
RB2
ERS1
ERS2
DR-90
REC/ERS HEAD AMP
RE-70

NOTE:
PARENTHESIS SHOW THE PAGES
OF SCHEMATIC DIAGRAMS

MD-65,RE-70 BLOCK DIAGRAM

HDV-10(J) ;#10001-
HDV-10(UC) ;#10001-
HDV-10(EK) ;#10001-

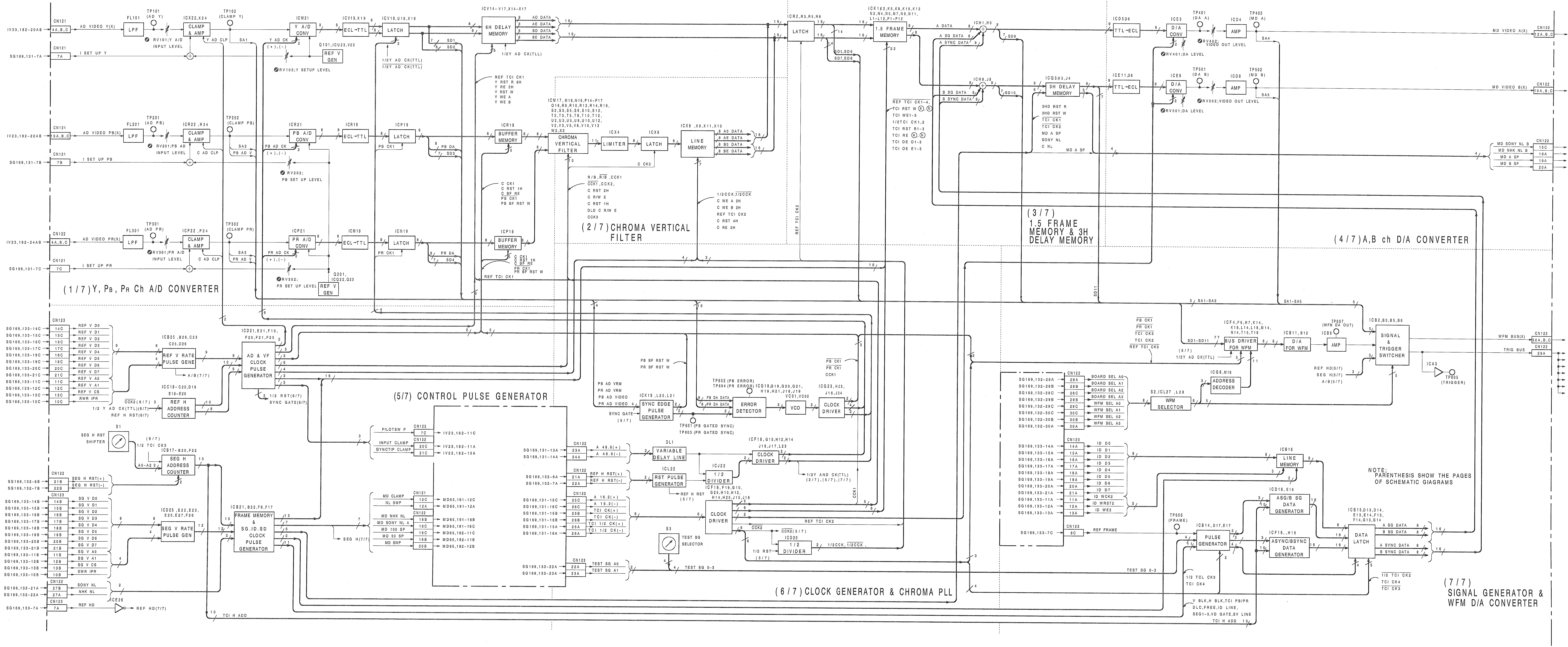
(1/7) Y, PB, PR Ch A/D CONVERTER
(2/7) CHROMA VERTICAL FILTER
(3/7) 1.5 FRAME MEMORY & 3H DELAY MEMORY
(4/7) A,B ch D/A CONVERTER
(5/7) CONTROL PULSE GENERATOR
(6/7) CLOCK GENERATOR & CHROMA PLL
(7/7) SIGNAL GENERATOR & WFM D/A CONVERTER
LPF
CLAMP & AMP
Y A/D CONV
PB A/D CONV
PR A/D CONV
ECL→TTL
LATCH
6H DELAY MEMORY
BUFFER MEMORY
CHROMA VERTICAL FILTER
LIMITER
LINE MEMORY
1.5 FRAME MEMORY
3H DELAY MEMORY
TTL→ECL
D/A CONV
AMP
REF V GEN
REF V RATE PULSE GENE
AD & VF CLOCK PULSE GENERATOR
REF H ADDRESS COUNTER
SEG H ADDRESS COUNTER
SEG V RATE PULSE GEN
FRAME MEMORY & SG.ID.SD CLOCK PULSE GENERATOR
SYNC EDGE PULSE GENERATOR
ERROR DETECTOR
VCO
CLOCK DRIVER
VARIABLE DELAY LINE
RST PULSE GENERATOR
1/2 DIVIDER
CLOCK DRIVER
BUS DRIVER FOR WFM
D/A FOR WFM
SIGNAL & TRIGGER SWITCHER
ADDRESS DECODER
WFM SELECTOR
LINE MEMORY
A/B SG DATA GENERATOR
ASYNC/BSYNC DATA GENERATOR
PULSE GENERATOR
DATA LATCH
MD VIDEO A(X)
MD VIDEO B(X)
WFM BUS(X)
TRIG BUS
TP503 (TRIGGER)
NOTE: PARENTHESIS SHOW THE PAGES OF SCHEMATIC GIAGRAMS

IPR-1 BLOCK DIAGRAM

HDV-10(J) ;#10001-
HDV-10(UC) ;#10001-
HDV-10(EK) ;#10001-

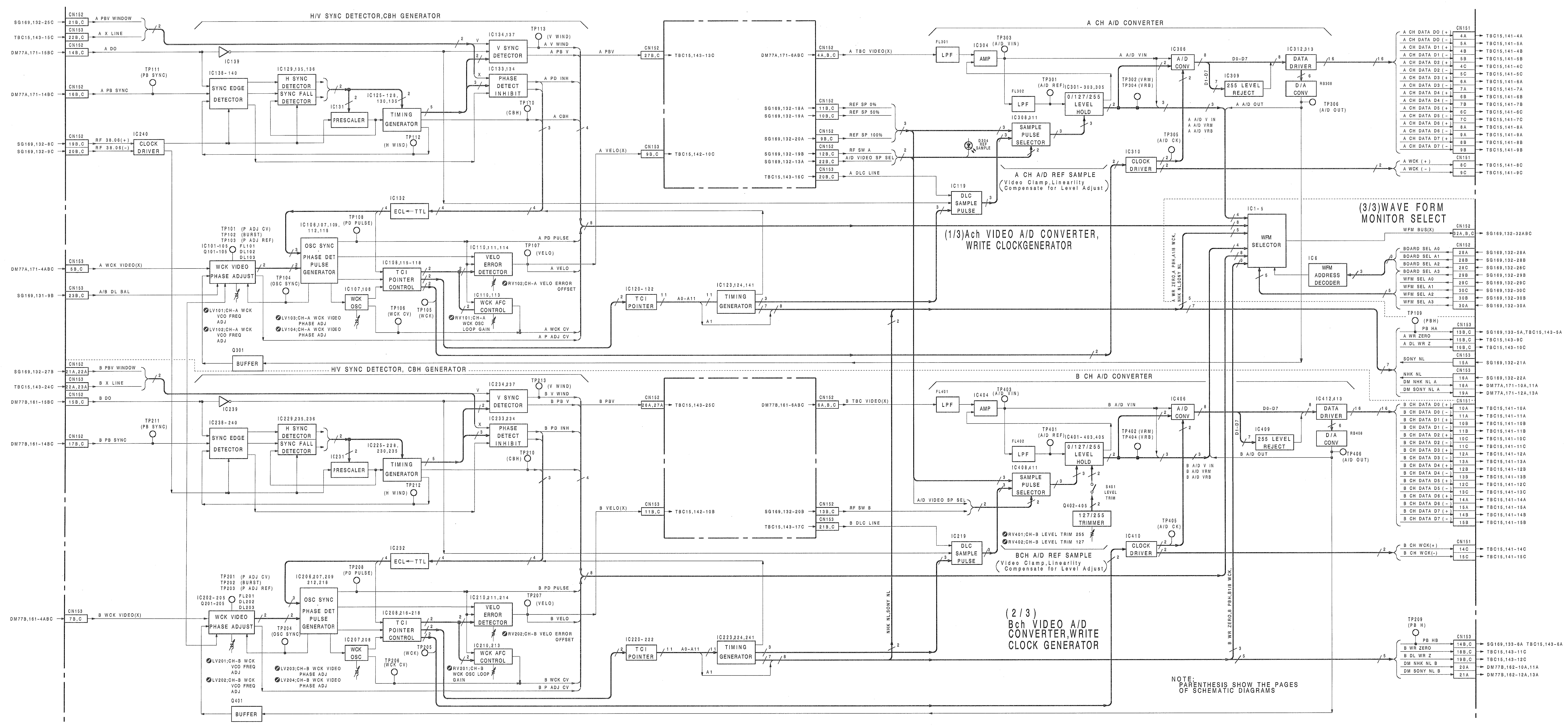
H/V SYNC DETECTOR,CBH GENERATOR
SYNC EDGE DETECTOR
H SYNC DETECTOR
SYNC FALL DETECTOR
PRESCALER
TIMING GENERATOR
V SYNC DETECTOR
PHASE DETECT INHIBIT
CLOCK DRIVER
ECL→TTL
OSC SYNC PHASE DET PULSE GENERATOR
WCK VIDEO PHASE ADJUST
TCI POINTER CONTROL
VELO ERROR DETECTOR
WCK OSC
WCK AFC CONTROL
BUFFER
TCI POINTER
TIMING GENERATOR
H/V SYNC DETECTOR, CBH GENERATOR
A CH A/D CONVERTER
LPF
AMP
A/D CONV
DATA DRIVER
D/A CONV
255 LEVEL REJECT
0/127/255 LEVEL HOLD
SAMPLE PULSE SELECTOR
CLOCK DRIVER
DLC SAMPLE PULSE
A CH A/D REF SAMPLE
(Video Clamp,Linearity Compensate for Level Adjust)
(1/3)Ach VIDEO A/D CONVERTER, WRITE CLOCKGENERATOR
(3/3)WAVE FORM MONITOR SELECT
WFM SELECTOR
WFM ADDRESS DECODER
B CH A/D CONVERTER
127/255 TRIMMER
BCH A/D REF SAMPLE
(Video Clamp,Linearity Compensate for Level Adjust)
(2/3) Bch VIDEO A/D CONVERTER,WRITE CLOCK GENERATOR
NOTE:
PARENTHESIS SHOW THE PAGES OF SCHEMATIC DIAGRAMS

TBC-14 BLOCK DIAGRAM

HDV-10(J) ;#10001-
HDV-10(UC) ;#10001-
HDV-10(EK) ;#10001-

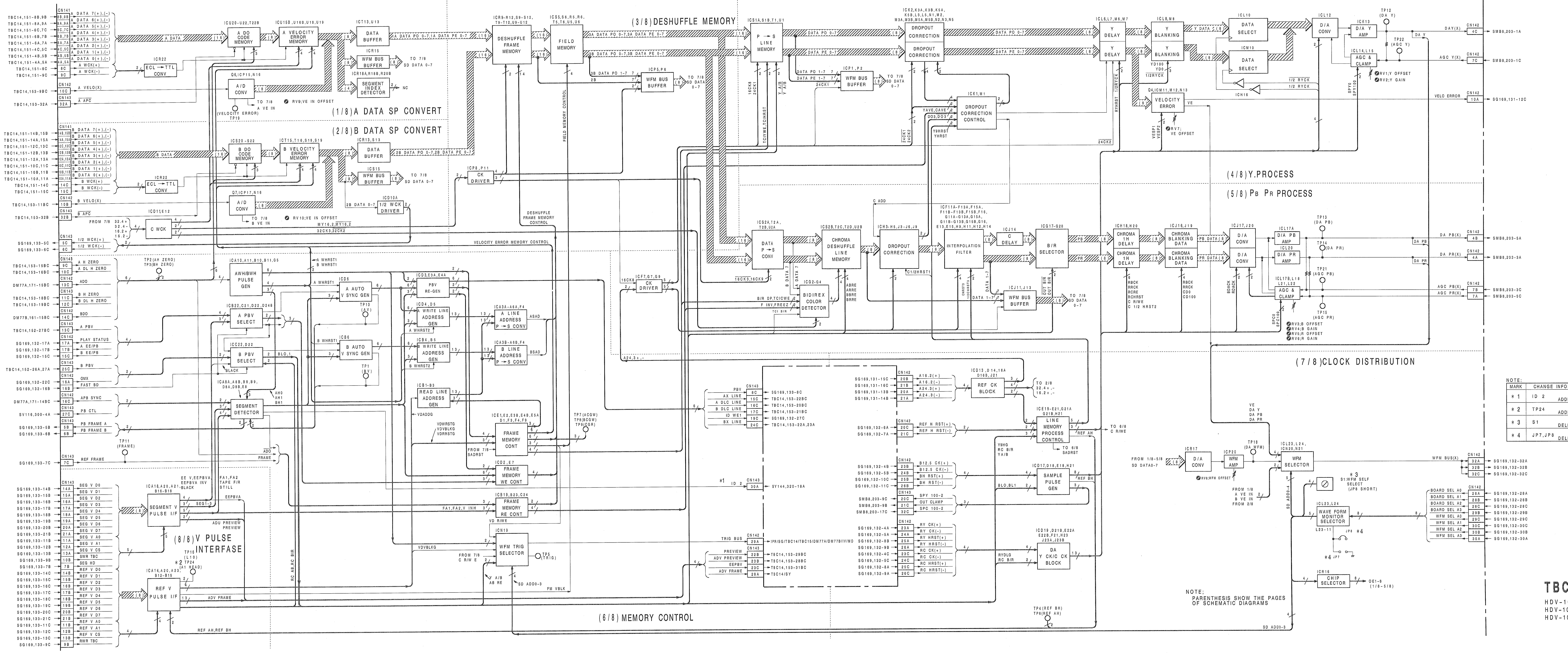
(1/8)A DATA SP CONVERT
(2/8)B DATA SP CONVERT
(3/8)DESHUFFLE MEMORY
(4/8)Y.PROCESS
(5/8)PB PR PROCESS
(6/8)MEMORY CONTROL
(7/8)CLOCK DISTRIBUTION
(8/8)V PULSE INTERFASE
A DO CODE MEMORY
A VELOCITY ERROR MEMORY
DATA BUFFER
WFM BUS BUFFER
SEGMENT INDEX DETECTOR
A/D CONV
ECL → TTL CONV
B DO CODE MEMORY
B VELOCITY ERROR MEMORY
C WCK
1/2 WCK DRIVER
CK DRIVER
DESHUFFLE FRAME MEMORY
FIELD MEMORY
P → S LINE MEMORY
DROPOUT CORRECTION
DROPOUT CORRECTION CONTROL
Y DELAY
Y BLANKING
DATA SELECT
D/A CONV
D/A Y AMP
AGC & CLAMP
VELOCITY ERROR
DATA P → S CONV
CHROMA DESHUFFLE LINE MEMORY
DROPOUT CORRECTION
INTERPOLATION FILTER
C DELAY
B/R SELECTOR
CHROMA 1H DELAY
CHROMA BLANKING DATA
D/A PB AMP
D/A PR AMP
BIDIREX COLOR DETECTOR
AWH/BWH PULSE GEN
A PBV SELECT
B PBV SELECT
A AUTO V SYNC GEN
B AUTO V SYNC GEN
PBV RE-GEN
A WRITE LINE ADDRESS GEN
B WRITE LINE ADDRESS GEN
A LINE ADDRESS P → S CONV
B LINE ADDRESS P → S CONV
READ LINE ADDRESS GEN
SEGMENT DETECTOR
FRAME MEMORY CONT
FRAME MEMORY WE CONT
FRAME MEMORY RE CONT
WFM TRIG SELECTOR
SEGMENT V PULSE I/F
REF V PULSE I/F
REF CK BLOCK
LINE MEMORY PROCESS CONTROL
SAMPLE PULSE GEN
DA Y CK/C CK BLOCK
D/A CONV
WFM AMP
WFM SELECTOR
WAVE FORM MONITOR SELECTOR
CHIP SELECTOR
NOTE:
PARENTHESIS SHOW THE PAGES OF SCHEMATIC DIAGRAMS

NOTE:

MARK	CHANGE INFORMATION	SERIAL NO.
∗ 1	ID 2 ADDED	#10301-
∗ 2	TP24 ADDED	#10801-
∗ 3	S1 DELETED	
∗ 4	JP7,JP8 DELETED	

TBC-15 BLOCK DIAGRAM

HDV-10(J) ;#10001-
HDV-10(UC) ;#10001-
HDV-10(EK) ;#10001-

REFERENCE PLL
INPUT SYNC SELECTOR
MAIN SYNC SEPARATOR
SUB SYNC SEPARATOR
V SEPARATOR
OSC SELECTOR
REF PHASE COMP
VCO (24.2757)
VCO (24.3)
REFERENCE CLOCK GENERATOR
PLL LOCK DET
INT SYNC
INTERNAL GENERATOR UNLOCK
GENERATOR LOCK
REF H GENERATOR
REF V GENERATOR
SYS H GENERATOR
TRI SYNC GENERATOR
V BLK TIMING GENERATOR
SYSTEM PLL
SYS PHASE COMP
SYSTEM CLOCK GENERATOR
CHROMA PHASE PLL
DELAY
ECL BUFFER
VELO LAMP GENERATOR
VELO COMP PLL
(2/3) GEN,LOCK/REF SYNC GENERATOR
TCI PLL
1/150 DIVIDER
1/179 DIVIDER
TCI PHASE COMP
VCO (28.969)
VCO (28.998)
TCI CLOCK GENERATOR
SEGMENT H GENERATOR
SEGMENT V GENERATOR
PB LOGIC
PB FREQUENCY CONTROLLER
NOTE; PARENTHESIS SHOW THE PAGES OF SCHEMATIC DIAGRAMS
(3/3) TCI SYNC GENERATOR
BUFFER
SYS DATA BUFFER
SYS ADDRESS BUFFER
CONTROL LATCH
CHIP SELECTOR
BOARD WFM SELECTOR
WFM SIG AMP
A/D CONVERTER
INDEX LINE MEMORY
DIAG LINE MEMORY
TRIG SELECTOR
LINE SELECTOR
PG DETECTOR
I/O PORT EXPANDER
1VD
LATCH
INVERTER
WFM TRIGGER SELECTOR
PLL FREQUENCY SYNTH
D/50/100 RF FREQUENCY PLL
D/A CONVERTER
LATCH
AMP
LATCH
(1/3) VIDEO CONTROL INTERFACE

SG-169 BLOCK DIAGRAM

HDV-10(J) ;f10001-
HDV-10(UC) ;f10001-
HDV-10(EK) ;f10001-

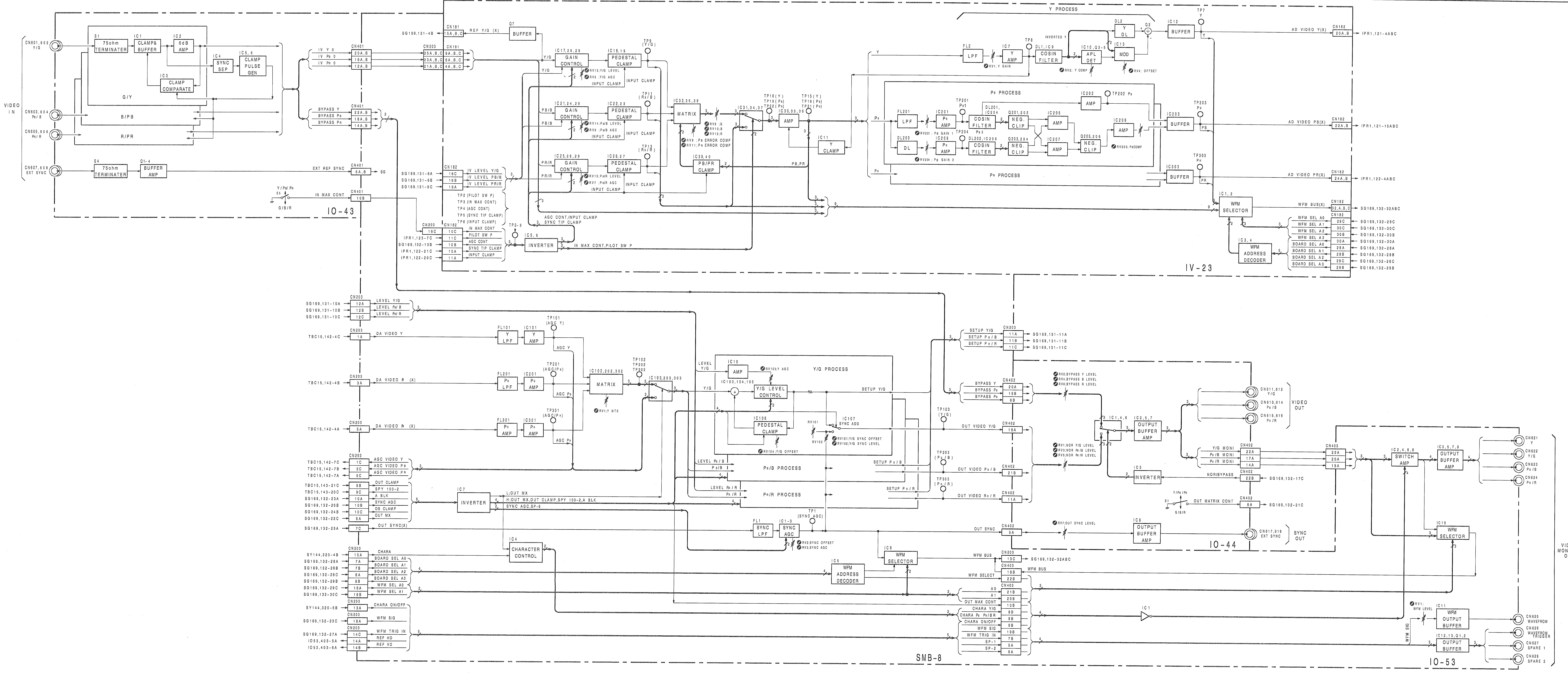
VIDEO IN
CN601,602 Y/G
CN603,604 PB/B
CN605,606 PR/R
CN607,608 EXT SYNC
S1 75ohm TERMINATER
IC1 CLAMP& BUFFER
IC2 6dB AMP
IC3 CLAMP COMPARATE
IC4 SYNC SEP
IC5,6 CLAMP PULSE GEN
G/Y
B/PB
R/PR
S4 75ohm TERMINATER
Q1-4 BUFFER AMP
EXT REF SYNC
SG
Y/PB/PR S5 G/B/R
IN MAX CONT
IO-43
CN401
IV Y 0
IV PB 0
IV PR 0
BYPASS Y
BYPASS PB
BYPASS PR
CN181 CN203
SG169,131-4B
REF Y/G (X)
Q7 BUFFER
IC17,20,29 GAIN CONTROL
IC18,19 PEDESTAL CLAMP
IC21,24,29 GAIN CONTROL
IC22,23 PEDESTAL CLAMP
IC25,28,29 GAIN CONTROL
IC26,27 PEDESTAL CLAMP
RV13;Y/G LEVEL
RV5 ;Y/G AGC
RV14;PB/B LEVEL
RV6 ;PB/B AGC
RV15;PR/R LEVEL
RV7 ;PR/R AGC
INPUT CLAMP
TP9 (Y/G)
TP11 (RB/B)
TP13 (RR/R)
IC32,35,38 MATRIX
RV8 ;G
RV10;B
RV12;R
RV9 ;PB ERROR COMP
RV11;PR ERROR COMP
IC39,40 PB/PR CLAMP
PB,PR
IC31,34,37
TP16(Y) TP19(PB) TP22(PR)
IC30,33,36 AMP
TP15(Y) TP18(PB) TP21(PR)
IC11 Y CLAMP
CN182
SG169,131-6A
SG169,131-6B
SG169,131-6C
IV LEVEL Y/G
IV LEVEL PB/B
IV LEVEL PR/R
TP2 (PILOT SW P)
TP3 (IN MAX CONT)
TP4 (AGC CONT)
TP5 (SYNC TIP CLAMP)
TP6 (INPUT CLAMP)
IPR1,123-7C
SG169,132-13B
IPR1,122-21C
IPR1,122-20C
IN MAX CONT
PILOT SW P
AGC CONT
SYNC TIP CLAMP
INPUT CLAMP
TP2-6
IC5,6 INVERTER
AGC CONT,INPUT CLAMP
SYNC TIP CLAMP
IN MAX CONT,PILOT SW P
Y PROCESS
FL2 LPF
RV1; Y GAIN
IC7 Y AMP
TP8
DL1,IC9 COSIN FILTER
INVERTED Y
IC10,Q3-5 APL DET
RV2; Y COMP
DL2 Y DL
IC13 MOD
RV4; OFFSET
Q2
IC12 BUFFER
TP7 Y
PB PROCESS
FL201 LPF
IC201 PB AMP
TP201 PB1
DL201,IC204 COSIN FILTER
Q201,202 NEG. CLIP
IC205 AMP
IC202 AMP
TP202 PB
IC208 AMP
RV201 ; PB GAIN 1
DL203 DL
IC209 PB AMP
TP204 PB2
DL202,IC206 COSIN FILTER
Q203,204 NEG. CLIP
IC207 AMP
Q205,206 NEG. CLIP
RV203; PBCOMP
RV204 ; PB GAIN 2
PR PROCESS
IC203 BUFFER
TP203 PB
IC303 BUFFER
TP303 PR
AD VIDEO Y(X)
AD VIDEO PB(X)
AD VIDEO PR(X)
20A,B
22A,B
24A,B
IPR1,121-4ABC
IPR1,121-15ABC
IPR1,122-4ABC
IC1,2 WFM SELECTOR
WFM BUS(X)
SG169,132-32ABC
IC3,4 WFM ADDRESS DECODER
WFM SEL A0
WFM SEL A1
WFM SEL A2
WFM SEL A3
BOARD SEL A0
BOARD SEL A1
BOARD SEL A2
BOARD SEL A3
SG169,132-29C
SG169,132-30C
SG169,132-30B
SG169,132-30A
SG169,132-28A
SG169,132-28B
SG169,132-28C
SG169,132-29B
IV-23
SG169,131-10A
SG169,131-10B
SG169,131-10C
LEVEL Y/G
LEVEL PB/B
LEVEL PR/R
TBC15,142-4C
TBC15,142-4B
TBC15,142-4A
DA VIDEO Y
DA VIDEO B (X)
DA VIDEO R (X)
FL101 Y LPF
IC101 Y AMP
TP101 (AGC Y)
FL201 PB LPF
IC201 PB AMP
TP201 (AGC/PB)
FL301 PR AMP
IC301 PR AMP
TP301 (AGC/PR)
AGC Y
AGC PB
AGC PR
IC102,202,302 MATRIX
RV1;Y MTX
TP102 TP202 TP302
IC103,203,303
TBC15,142-7C
TBC15,142-7B
TBC15,142-7A
AGC VIDEO Y
AGC VIDEO PB
AGC VIDEO PR
TBC15,143-21C
TBC15,143-20C
SG169,132-23A
SG169,132-25B
SG169,132-24B
SG169,132-22C
OUT CLAMP
SPY 100-2
A BLK
SYNC AGC
OS CLAMP
OUT MX
IC7 INVERTER
L;OUT MX
H;OUT MX,OUT CLAMP,SPY 100-2,A BLK
SYNC AGC,SP-6
SG169,132-25A
OUT SYNC(X)
Y/G PROCESS
LEVEL Y/G
IC10 AMP
RV105;Y AGC
IC103,104,105
Y/G LEVEL CONTROL
IC106 PEDESTAL CLAMP
RV104;Y/G OFFSET
RV101 RV102
IC107 SYNC ADD
RV101;Y/G SYNC OFFSET
RV102;Y/G SYNC LEVEL
SETUP Y/G
PB/B PROCESS
PR/R PROCESS
LEVEL PB/B
LEVEL RR/R
SETUP PB/B
SETUP PR/R
FL1 SYNC LPF
IC1-3 SYNC AGC
TP1 (SYNC AGC)
RV2;SYNC OFFSET
RV3;SYNC AGC
SY144,320-4B
SG169,132-28A
SG169,132-28B
SG169,132-28C
SG169,132-29B
SG169,132-29C
SG169,132-30C
CHARA
IC4 CHARACTER CONTROL
IC5 WFM ADDRESS DECODER
IC6 WFM SELECTOR
SY144,320-5B
CHARA ON/OFF
SG169,132-23C
WFM SIG
SG169,132-27A
IO53,403-5A
IO53,403-6A
WFM TRIG IN
REF HD
REF VD
SMB-8
SETUP Y/G
SETUP PB/B
SETUP PR/R
SG169,131-11A
SG169,131-11B
SG169,131-11C
TP103 (Y/G)
TP203 (PB/B)
TP303 (PR/R)
OUT VIDEO Y/G
OUT VIDEO PB/B
OUT VIDEO RR/R
OUT SYNC
CN402
RV2;BYPASS Y LEVEL
RV4;BYPASS B LEVEL
RV6;BYPASS R LEVEL
RV1;NOR Y/G LEVEL
RV3;NOR PB/B LEVEL
RV5;NOR PR/R LEVEL
IC1,4,6
IC2,5,7 OUTPUT BUFFER AMP
IC3 INVERTER
NOR/BYPASS
SG169,132-17C
Y/PB/PR S1 G/B/R
OUT MATRIX CONT
SG169,132-21C
RV7;OUT SYNC LEVEL
IC8 OUTPUT BUFFER AMP
CN611,612 Y/G
CN613,614 PB/B
CN615,616 PR/R
VIDEO OUT
CN617,618 EXT SYNC
SYNC OUT
IO-44
Y/G MONI
PB/B MONI
PR/R MONI
CN403
IC2,4,6,8 SWITCH AMP
IC3,5,7,9 OUTPUT BUFFER AMP
CN621 Y
CN622 Y/G
CN623 PB/B
CN624 PR/R
WFM BUS
SG169,132-32ABC
WFM SELECT
A0
A1
OUT MAX CONT
CHARA Y/G
CHARA PB PR/BR
CHARA ON/OFF
WFM SIG
WFM TRIG IN
SP-1
SP-2
IC1
IC10 WFM SELECTOR
RV1; WFM LEVEL
IC11 WFM OUTPUT BUFFER
IC12,13,Q1,2 OUTPUT BUFFER
CN625 WAVEFROM
CN626 WAVEFROM TRIGGER
CN627 SPARE 1
CN628 SPARE 2
VIDEO MONITOR OUT
IO-53

IV-23,SMB-8
IO-43/44/53

VIDEO INPUT/OUTPUT BLOCK DIAGRAM

HDV-10(J) ;#10001-
HDV-10(UC) ;#10001-
HDV-10(EK) ;#10001-

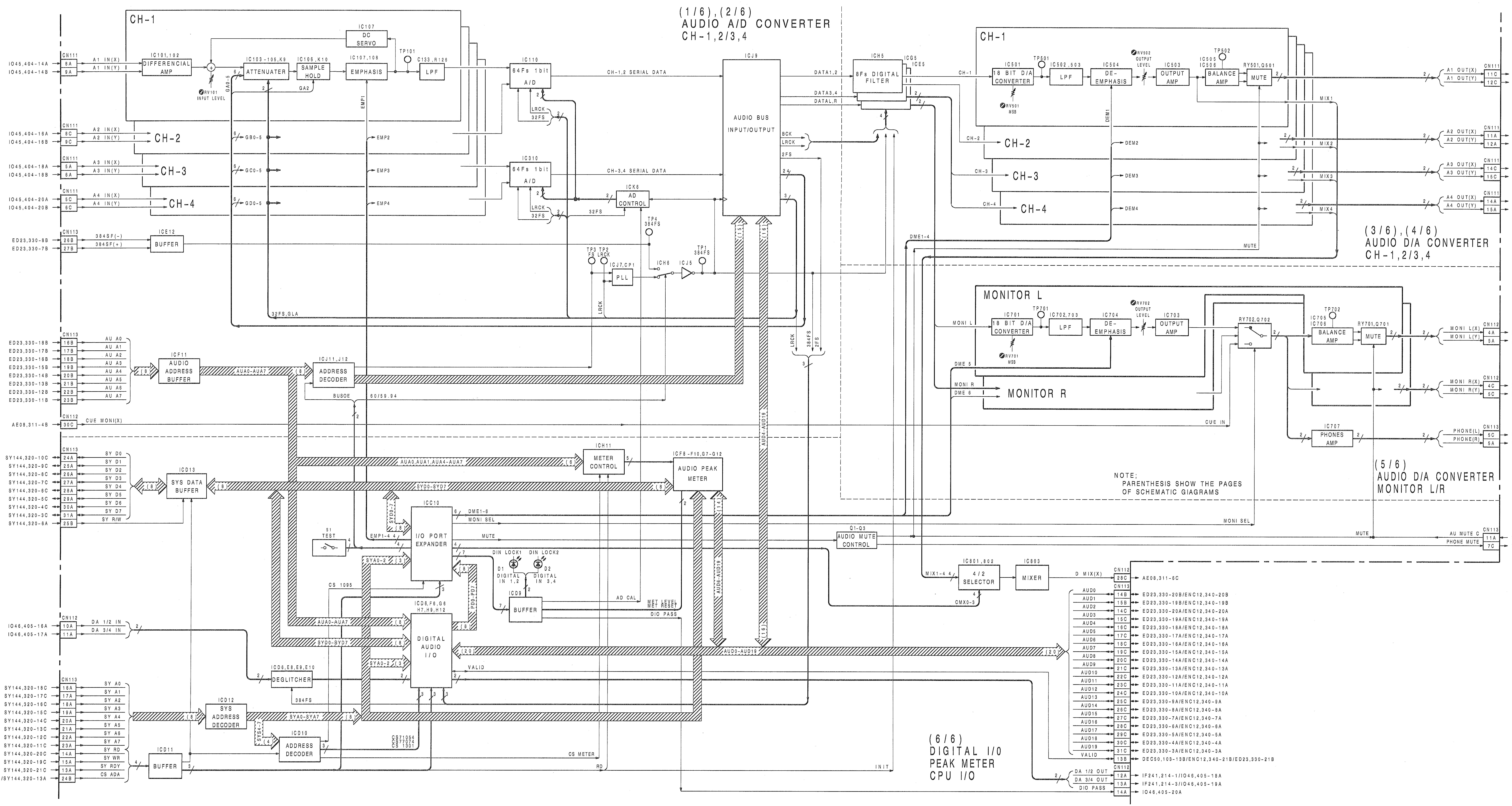
(1/6),(2/6)
AUDIO A/D CONVERTER
CH-1,2/3,4
CH-1
DIFFERENCIAL AMP
ATTENUATER
SAMPLE HOLD
DC SERVO
EMPHASIS
LPF
64Fs 1bit A/D
CH-2
CH-3
CH-4
AD CONTROL
BUFFER
PLL
AUDIO BUS INPUT/OUTPUT
8Fs DIGITAL FILTER
AUDIO ADDRESS BUFFER
ADDRESS DECODER
METER CONTROL
AUDIO PEAK METER
SYS DATA BUFFER
I/O PORT EXPANDER
DIGITAL AUDIO I/O
DEGLITCHER
SYS ADDRESS DECODER
ADDRESS DECODER
BUFFER
AUDIO MUTE CONTROL
4/2 SELECTOR
MIXER
(3/6),(4/6)
AUDIO D/A CONVERTER
CH-1,2/3,4
18 BIT D/A CONVERTER
DE-EMPHASIS
OUTPUT AMP
BALANCE AMP
MUTE
MONITOR L
MONITOR R
PHONES AMP
(5/6)
AUDIO D/A CONVERTER
MONITOR L/R
(6/6)
DIGITAL I/O
PEAK METER
CPU I/O
NOTE;
PARENTHESIS SHOW THE PAGES
OF SCHEMATIC GIAGRAMS

ADA-14 BLOCK DIAGRAM

HDV-10(J) ;#10001-
HDV-10(UC) ;#10001-
HDV-10(EK) ;#10001-

(1/6)
DATA RECOVERY A
(2/6)
TBC MEMORY A
(3/6)
DATA RECOVERY B
(4/6)
TBC MEMORY B
(5/6)
ERROR CORRECTION
(6/6)
CPU INTERFACE
EE/PB SELECTOR & GATE
DIFFEREN-TIATOR
LATCH
NRZ
SERIAL-PARALLEL CONVERTER
14/8 DEMODULATOR
RE-BLOCK
SYNC DETECTOR
SYNC INERTIA
ROW ADDRESS GENERATOR
PLL
DIVIDER BY 14
VCO FREQUENCY
PARITY CHECK
ADDRESS DECODER
ADDRESS +1
ADDRESS CONTINUITY 3
ADDRESS INERTIA
3 BLOCK DELAY
ADDRESS RE-GENERATOR
ADDRESS ENCODER
MEMORY CONTROL
TBC MEMORY
BUFFER
MODE COUNTER
SAMPLE COUNTER
FRAME PULSE GENERATOR
MODE CONTROLLER
MAIN ADDRESS
MAIN MEMORY
SUB ADDRESS
SUB MEMORY
ECC
ERROR FLAG DECODER
AUDIO BUS OUTPUTS
DATA OUT ADDRESS
CLOCK CONTROL
CORRECTION MODE SELECTOR
STEP COUNTER
TBC CONTROLLER
CLOCK GENERATOR
MUTING DETECTOR
SYS DATA BUFFER
SYS ADDRESS BUFFER
I/O PORT EXPANDER
MEMORY MAPPING
SUB CODE MEMORY
ADDRESS DECODER
I/O CONTROLLER
ERROR COUNTER
ERROR COUNTER CONTROLLER
REF FRAME
RED
GREEN
CN102
CN103
NOTE:
PARENTHESIS SHOW THE PAGES
OF SCHEMATIC DIAGRAMS

DEC-50 BLOCK DIAGRAM

HDV-10(J) ;#10001-
HDV-10(UC) ;#10001-
HDV-10(EK) ;#10001-

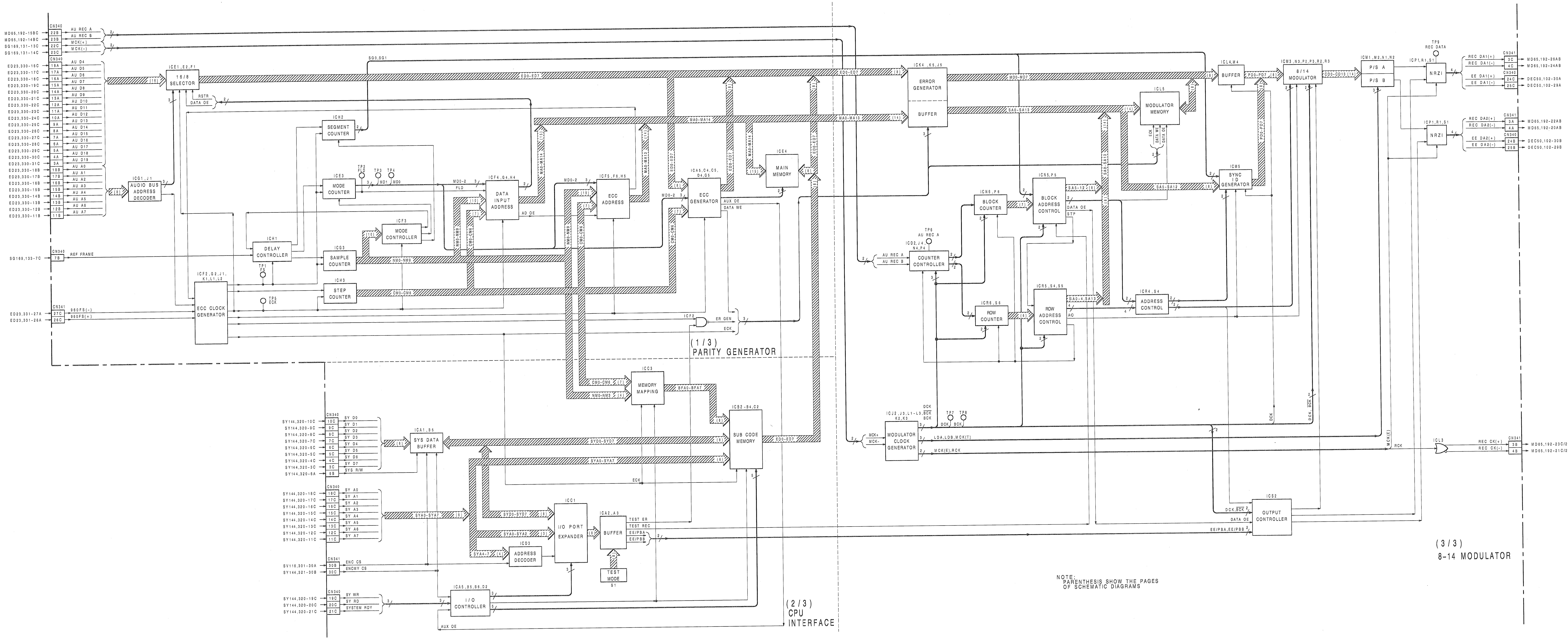
16/8 SELECTOR
AUDIO BUS ADDRESS DECODER
SEGMENT COUNTER
MODE COUNTER
MODE CONTROLLER
DELAY CONTROLLER
SAMPLE COUNTER
STEP COUNTER
ECC CLOCK GENERATOR
DATA INPUT ADDRESS
ECC ADDRESS
ECC GENERATOR
MAIN MEMORY
(1/3) PARITY GENERATOR
MEMORY MAPPING
SUB CODE MEMORY
SYS DATA BUFFER
I/O PORT EXPANDER
BUFFER
ADDRESS DECODER
TEST MODE S1
I/O CONTROLLER
(2/3) CPU INTERFACE
ERROR GENERATOR
BUFFER
MODULATOR MEMORY
BUFFER
8/14 MODULATOR
P/S A
P/S B
NRZI
NRZI
SYNC TO GENERATOR
BLOCK COUNTER
BLOCK ADDRESS CONTROL
COUNTER CONTROLLER
ROW COUNTER
ROW ADDRESS CONTROL
ADDRESS CONTROL
MODULATOR CLOCK GENERATOR
OUTPUT CONTROLLER
(3/3) 8-14 MODULATOR

NOTE:
PARENTHESIS SHOW THE PAGES
OF SCHEMATIC DIAGRAMS

ENC-12 BLOCK DIAGRAM

HDV-10(J) ;#10001-
HDV-10(UC) ;#10001-
HDV-10(EK) ;#10001-

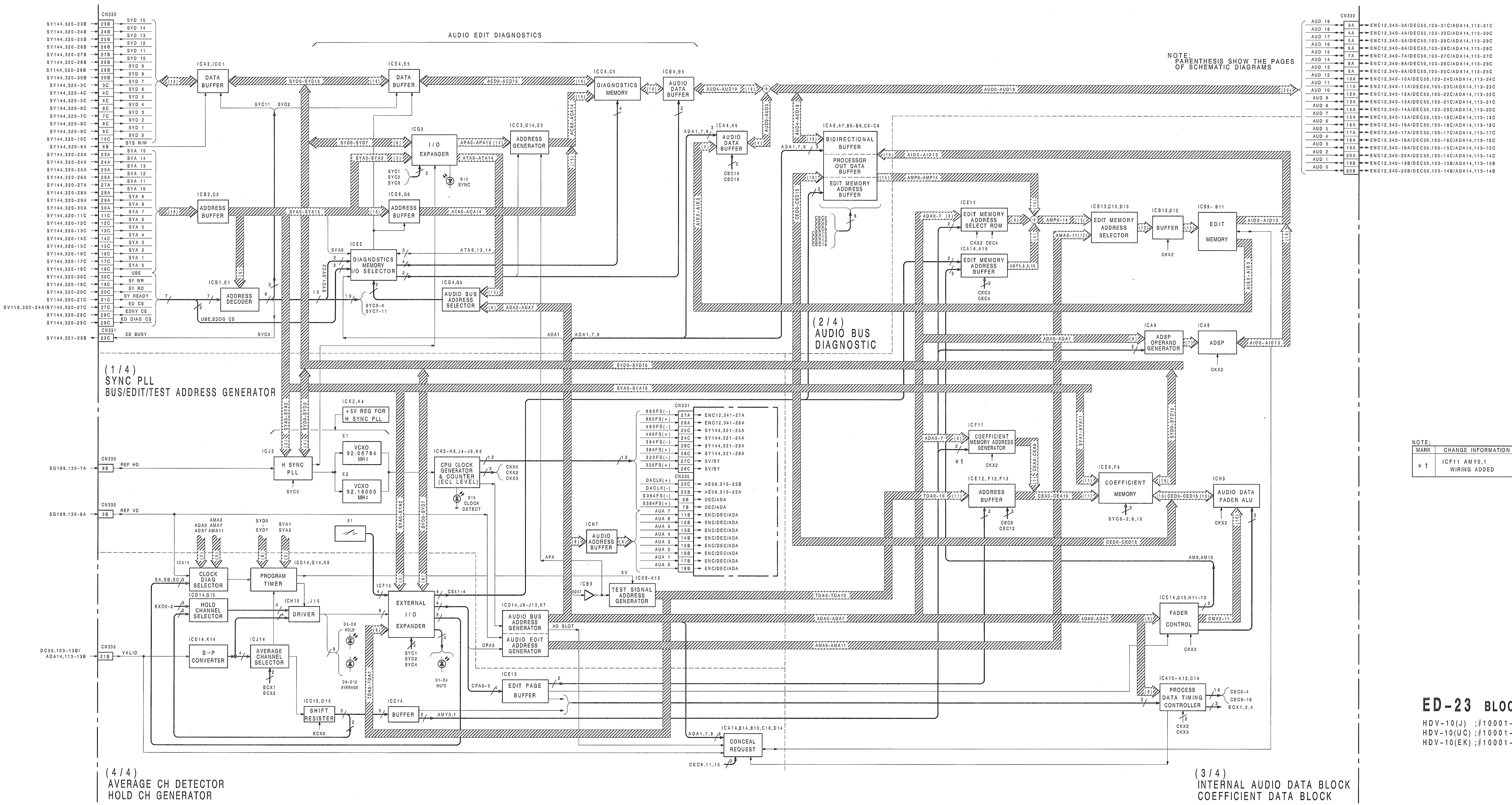
AUDIO EDIT DIAGNOSTICS
CN330
CN331
DATA BUFFER
ADDRESS BUFFER
ADDRESS DECODER
I/O EXPANDER
DIAGNOSTICS MEMORY I/O SELECTOR
ADDRESS GENERATOR
DIAGNOSTICS MEMORY
AUDIO DATA BUFFER
AUDIO BUS ADDRESS SELECTOR
BIDIRECTIONAL BUFFER
PROCESSOR OUT DATA BUFFER
EDIT MEMORY ADDRESS BUFFER
EDIT MEMORY ADDRESS SELECT ROM
EDIT MEMORY ADDRESS BUFFER
EDIT MEMORY ADDRESS SELECTOR
BUFFER
EDIT MEMORY
ADSP OPERAND GENERATOR
ADSP
(2/4) AUDIO BUS DIAGNOSTIC
(1/4) SYNC PLL BUS/EDIT/TEST ADDRESS GENERATOR
+5V REG FOR H SYNC PLL
VCXO 92.08784 MHz
VCXO 92.16000 MHz
H SYNC PLL
CPU CLOCK GENERATOR & COUNTER (ECL LEVEL)
D15 CLOCK DETECT
D13 SYNC
COEFFICIENT MEMORY ADDRESS GENERATOR
COEFFICIENT MEMORY
ADDRESS BUFFER
AUDIO DATA FADER ALU
AUDIO ADDRESS BUFFER
TEST SIGNAL ADDRESS GENERATOR
CLOCK DIAG SELECTOR
PROGRAM TIMER
HOLD CHANNEL SELECTOR
DRIVER
EXTERNAL I/O EXPANDER
S→P CONVERTER
AVERAGE CHANNEL SELECTOR
D5-D8 HOLD
D9-D12 AVERAGE
D1-D4 MUTE
SHIFT RESISTER
BUFFER
AUDIO BUS ADDRESS GENERATOR
AUDIO EDIT ADDRESS GENERATOR
EDIT PAGE BUFFER
FADER CONTROL
PROCESS DATA TIMING CONTROLLER
CONCEAL REQUEST
(4/4) AVERAGE CH DETECTOR HOLD CH GENERATOR
(3/4) INTERNAL AUDIO DATA BLOCK COEFFICIENT DATA BLOCK
SG169,133-7A
SG169,133-8A
DC50,103-13B/ADA14,113-13B
REF HD
REF VD
VALID
*1

NOTE;
PARENTHESIS SHOW THE PAGES
OF SCHEMATIC DIAGRAMS

NOTE;

MARK	CHANGE INFORMATION	SERIAL NO.
*1	ICF11 AMY0,1 WIRING ADDED	#11103-

ED-23 BLOCK DIAGRAM

HDV-10(J) ;#10001-
HDV-10(UC) ;#10001-
HDV-10(EK) ;#10001-

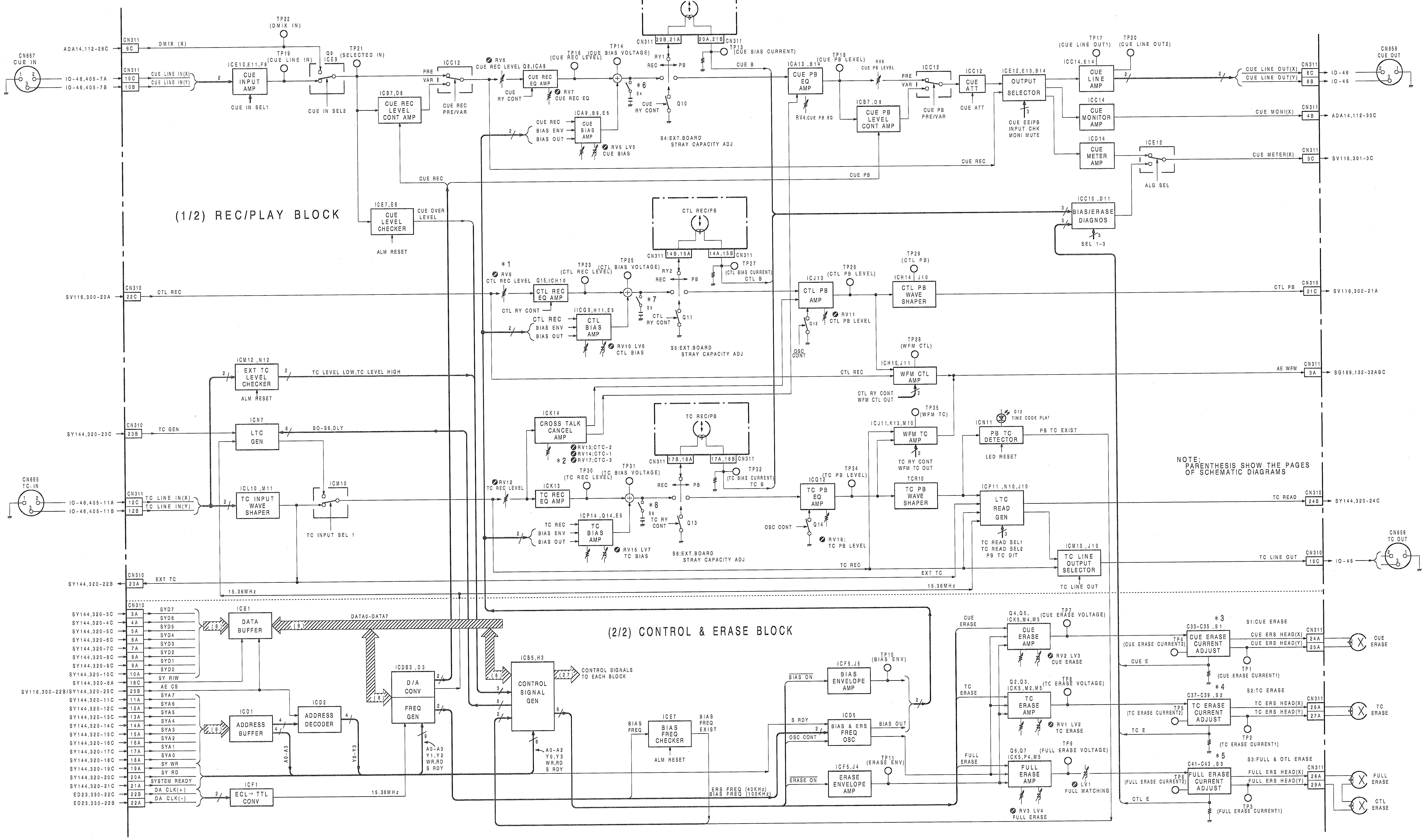
(1/2) REC/PLAY BLOCK
(2/2) CONTROL & ERASE BLOCK
CUE REC/PB
CTL REC/PB
TC REC/PB
CN657 CUE IN
CN655 TC IN
CN656 CUE OUT
CN658 TC OUT
CUE INPUT AMP
CUE IN SEL1
CUE IN SEL2
CUE REC LEVEL CONT AMP
CUE REC PRE/VAR
CUE REC EQ AMP
CUE BIAS AMP
CUE LEVEL CHECKER
ALM RESET
CUE PB EQ AMP
CUE PB LEVEL CONT AMP
CUE PB PRE/VAR
CUE ATT
OUTPUT SELECTOR
CUE LINE AMP
CUE MONITOR AMP
CUE METER AMP
ALG SEL
BIAS/ERASE DIAGNOS
SEL 1-3
S4:EXT.BOARD STRAY CAPACITY ADJ
CTL REC EQ AMP
CTL BIAS AMP
S5:EXT.BOARD STRAY CAPACITY ADJ
CTL PB AMP
CTL PB WAVE SHAPER
WFM CTL AMP
EXT TC LEVEL CHECKER
TC LEVEL LOW,TC LEVEL HIGH
LTC GEN
TC INPUT WAVE SHAPER
TC INPUT SEL 1
CROSS TALK CANCEL AMP
TC REC EQ AMP
TC BIAS AMP
S6:EXT.BOARD STRAY CAPACITY ADJ
TC PB EQ AMP
WFM TC AMP
TC PB WAVE SHAPER
PB TC DETECTOR
LTC READ GEN
TC LINE OUTPUT SELECTOR
DATA BUFFER
DATA0-DATA7
ADDRESS BUFFER
ADDRESS DECODER
D/A CONV
FREQ GEN
CONTROL SIGNAL GEN
CONTROL SIGNALS TO EACH BLOCK
ECL→TTL CONV
15.36MHz
BIAS FREQ CHECKER
BIAS ENVELOPE AMP
BIAS & ERS FREQ OSC
ERASE ENVELOPE AMP
CUE ERASE AMP
TC ERASE AMP
FULL ERASE AMP
CUE ERASE CURRENT ADJUST
TC ERASE CURRENT ADJUST
FULL ERASE CURRENT ADJUST
S1:CUE ERASE
S2:TC ERASE
S3:FULL & CTL ERASE
CUE ERASE
TC ERASE
FULL ERASE
CTL ERASE

NOTE:
PARENTHESIS SHOW THE PAGES OF SCHEMATIC DIAGRAMS

NOTE:

MARK	CHANGE INFORMATION	SERIAL NO.
*1	RV9 CTL REC LEVEL DELETED	#10201-
*2	RV17 CTC-3 ADDED	
*3	J1,J2 → S1 CHANGED	
*4	J3,J4 → S2 CHANGED	
*5	J5,J6 → S3 CHANGED	
*6	JP1 → S4 CHANGED	
*7	JP2 → S5 CHANGED	
*8	JP3 → S6 CHANGED	

AE-08 BLOCK DIAGRAM

HDV-10(J) ;#10001-
HDV-10(UC) ;#10001-
HDV-10(EK) ;#10001-

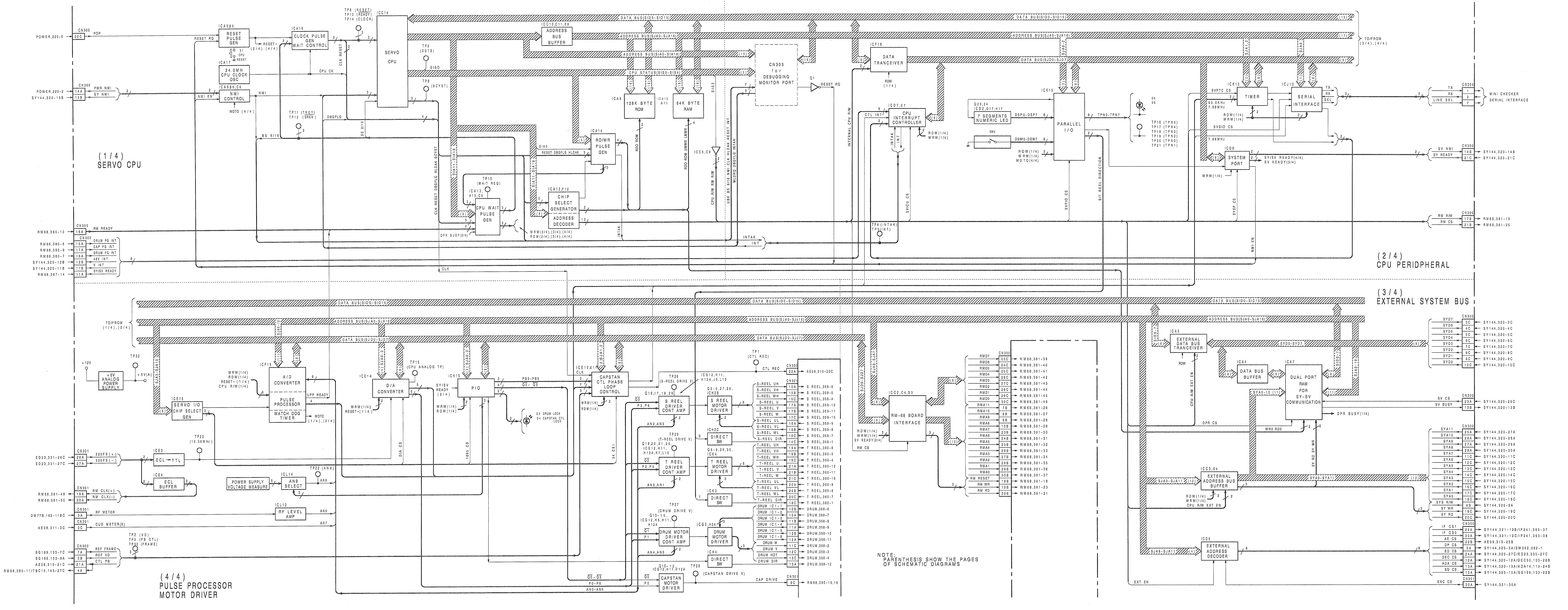

(1/4) SERVO CPU
SERVO CPU
RESET PULSE GEN
CLOCK PULSE GEN WAIT CONTROL
24.0MH CPU CLOCK OSC
NMI CONTROL
ADDRESS BUS BUFFER
128K BYTE ROM
64K BYTE RAM
RD/WR PULSE GEN
CPU WAIT PULSE GEN
CHIP SELECT GENERATOR
ADDRESS DECODER
CN303 for DEBUGGING MONITOR PORT
DATA BUS(SJD0-SJD15)
ADDRESS BUS(SJA0-SJA16)
TO/FROM (3/4),(4/4)
(2/4) CPU PERIDPHERAL
DATA TRANCEIVER
CPU INTERRUPT CONTROLLER
7 SEGMENTS NUMERIC LED
PARALLEL I/O
TIMER
SERIAL INTERFACE
SYSTEM PORT
MINI CHECKER SERIAL INTERFACE
(3/4) EXTERNAL SYSTEM BUS
EXTERNAL DATA BUS TRANSCEIVER
DATA BUS BUFFER
DUAL PORT RAM FOR SY-SV COMMUNICATION
EXTERNAL ADDRESS BUS BUFFER
EXTERNAL ADDRESS DECODER
RM-68 BOARD INTERFACE
TO/FROM (1/4),(2/4)
+5V ANALOG POWER SUPPLY
SERVO I/O CHIP SELECT GEN
A/D CONVERTER
PULSE PROCESSOR
WATCH DOG TIMER
D/A CONVERTER
PIO
CAPSTAN CTL PHASE LOOP CONTROL
S REEL DRIVER CONT AMP
S REEL MOTOR DRIVER
T REEL DRIVER CONT AMP
T REEL MOTOR DRIVER
DRUM MOTOR DRIVER CONT AMP
DRUM MOTOR DRIVER
CAPSTAN MOTOR DRIVER
DIRECT SW
ECL→TTL
ECL BUFFER
POWER SUPPLY VOLTAGE MEASURE
ANS SELECT
RF LEVEL AMP
(4/4) PULSE PROCESSOR MOTOR DRIVER

NOTE;
PARENTHESIS SHOW THE PAGES
OF SCHEMATIC DIAGRAMS

SV-116 BLOCK DIAGRAM

HDV-10(J) ;#10001-
HDV-10(UC) ;#10001-
HDV-10(EK) ;#10001-

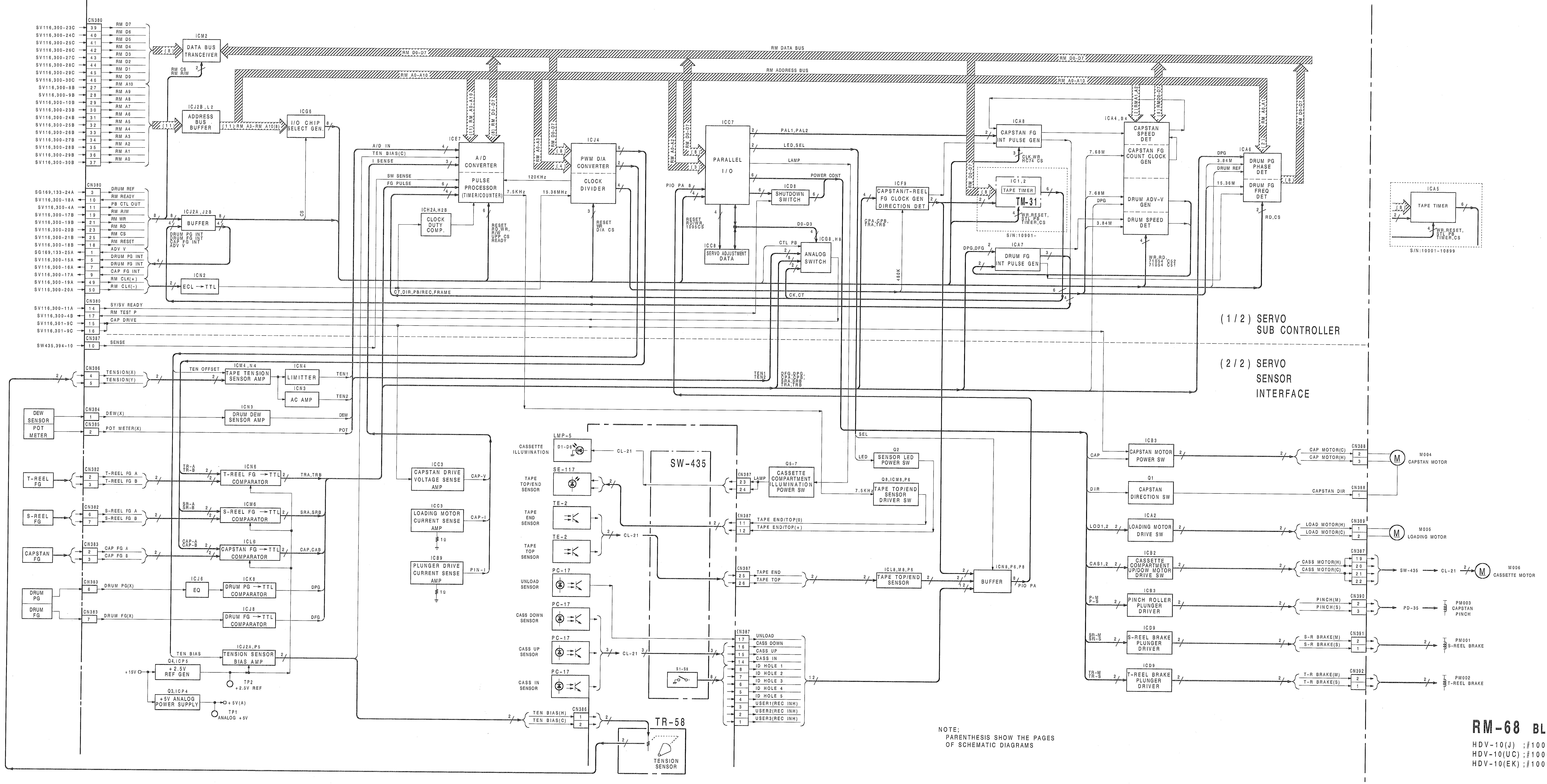

ICM2 DATA BUS TRANCEIVER
RM DATA BUS
RM ADDRESS BUS
ICJ2B, L2 ADDRESS BUS BUFFER
ICG5 I/O CHIP SELECT GEN.
ICE7 A/D CONVERTER PULSE PROCESSOR (TIMER/COUNTER)
ICJ4 PWM D/A CONVERTER CLOCK DIVIDER
ICC7 PARALLEL I/O
ICE8 SHUTDOWN SWITCH
ICC8 SERVO ADJUSTMENT DATA
ICD3 ANALOG SWITCH
ICF3 CAPSTAN/T-REEL FG CLOCK GEN DIRECTION DET
ICA8 CAPSTAN FG INT PULSE GEN
IC1, 2 TAPE TIMER TM-31
ICA7 DRUM FG INT PULSE GEN
ICA4, B4 CAPSTAN SPEED DET CAPSTAN FG COUNT CLOCK GEN DRUM ADV-V GEN DRUM SPEED DET
ICA6 DRUM PG PHASE DET DRUM FG FREQ DET
ICA5 TAPE TIMER
S/N:10001-10899
ICJ2A, J2B BUFFER
ICH2A, H2B CLOCK DUTY COMP
ICN2 ECL→TTL
(1/2) SERVO SUB CONTROLLER
(2/2) SERVO SENSOR INTERFACE
ICM4, N4 TAPE TENSION SENSOR AMP
ICN4 LIMITTER
ICN3 AC AMP
ICN5 DRUM DEW SENSOR AMP
DEW SENSOR
POT METER
T-REEL FG
S-REEL FG
CAPSTAN FG
DRUM PG
DRUM FG
ICN6 T-REEL FG→TTL COMPARATOR
ICN6 S-REEL FG→TTL COMPARATOR
ICL6 CAPSTAN FG→TTL COMPARATOR
ICJ6 EQ
ICK6 DRUM PG→TTL COMPARATOR
ICJ6 DRUM FG→TTL COMPARATOR
ICJ2A, P5 TENSION SENSOR BIAS AMP
Q4, ICP5 +2.5V REF GEN
Q3, ICP4 +5V ANALOG POWER SUPPLY
TP2 +2.5V REF
TP1 ANALOG +5V
ICC3 CAPSTAN DRIVE VOLTAGE SENSE AMP
ICC3 LOADING MOTOR CURRENT SENSE AMP
ICB9 PLUNGER DRIVE CURRENT SENSE AMP
LMP-5 CASSETTE ILLUMINATION
SE-117 TAPE TOP/END SENSOR
TE-2 TAPE END SENSOR
TE-2 TAPE TOP SENSOR
PC-17 UNLOAD SENSOR
PC-17 CASS DOWN SENSOR
PC-17 CASS UP SENSOR
PC-17 CASS IN SENSOR
SW-435
CL-21
TR-58
TENSION SENSOR
Q5-7 CASSETTE COMPARTMENT ILLUMINATION POWER SW
Q4, ICM8, P6 TAPE TOP/END SENSOR DRIVER SW
Q2 SENSOR LED POWER SW
ICL8, M8, P6 TAPE TOP/END SENSOR
ICN8, P8 BUFFER
ICB3 CAPSTAN MOTOR POWER SW
Q1 CAPSTAN DIRECTION SW
ICA2 LOADING MOTOR DRIVE SW
ICB2 CASSETTE COMPARTMENT UP/DOWN MOTOR DRIVE SW
ICB3 PINCH ROLLER PLUNGER DRIVER
ICD9 S-REEL BRAKE PLUNGER DRIVER
ICD9 T-REEL BRAKE PLUNGER DRIVER
M004 CAPSTAN MOTOR
M005 LOADING MOTOR
M006 CASSETTE MOTOR
PM003 CAPSTAN PINCH
PM001 S-REEL BRAKE
PM002 T-REEL BRAKE

NOTE:
PARENTHESIS SHOW THE PAGES
OF SCHEMATIC DIAGRAMS

RM-68 BLOCK DIAGRAM

HDV-10(J) ;#10001-
HDV-10(UC) ;#10001-
HDV-10(EK) ;#10001-

(2/5)
SYSTEM CPU
(3/5)
MEMORY
(1/5)
REMOTE/CONTROL PANEL CPU
(5/5)
TC READ,TC GEN,
CHARACTER GEN
(4/5)
PLL,SYSTEM CLOCK
DATA BUS(SID0-SID15)
ADDRESS BUS(SIA0-SIA18)
CONTROL BUS
RESET CIRCUIT
RESET SYNCRONIZE DRIVE READY CLOCK PULSE GEN
SYSTEM PROCESSOR (V33 CPU)
EXT I/O ADDRESS DECODER
SY I/O ADDRESS DECODER
NMI LOGIC
WAIT CYCLE SELECTOR & CHIP SELECTOR & STATUS DECODER
WAIT SEQUENCER
ADDRESS BUS DRIVER
PROGRAM ROM (V33)
WORK RAM (V33)
DATA BUS DRIVER & INPORT DATA LATCH
WR/ROW CONTROL
DATA BUS DRIVER
INTERRUPT CONTROLLER (V33)
I/O PORT TC READER/ CHARA GEN CONTROLL
TIME CODE GENERATOR
CHARACTER GENERATOR
TIME CODE READER
READY ACK
DUAL PORT RAM (V25 ⇄ V33)
BACK UP BATTERY
INTERFACE PROCESSOR (V25 CPU)
CLOCK DRIVER
STATUS DECODER
ADDRESS DECODER
INTERVAL TIMER CLOCK GEN
INTERRUPT CONTROLLER
PROGRAM ROM (V25)
WORK RAM (V25)
RS-232C INTERFACE
IF-241 BOARD (REAR REMOTE) INTERFACE
SIRCS INTERFACE
4MHz OSC
ECL → TTL CON V
SYSTEM CLOCK CONTROLLER
PLL
RS-232C I/F
ENC FRAME
SYA WD

NOTE
*;FOR FACTORY USE

NOTE:
PARENTHESIS SHOW THE PAGES
OF SCHEMATIC DIAGRAMS

SY-144 BLOCK DIAGRAM

HDV-10(J) ;10001-
HDV-10(UC) ;10001-
HDV-10(EK) ;10001-

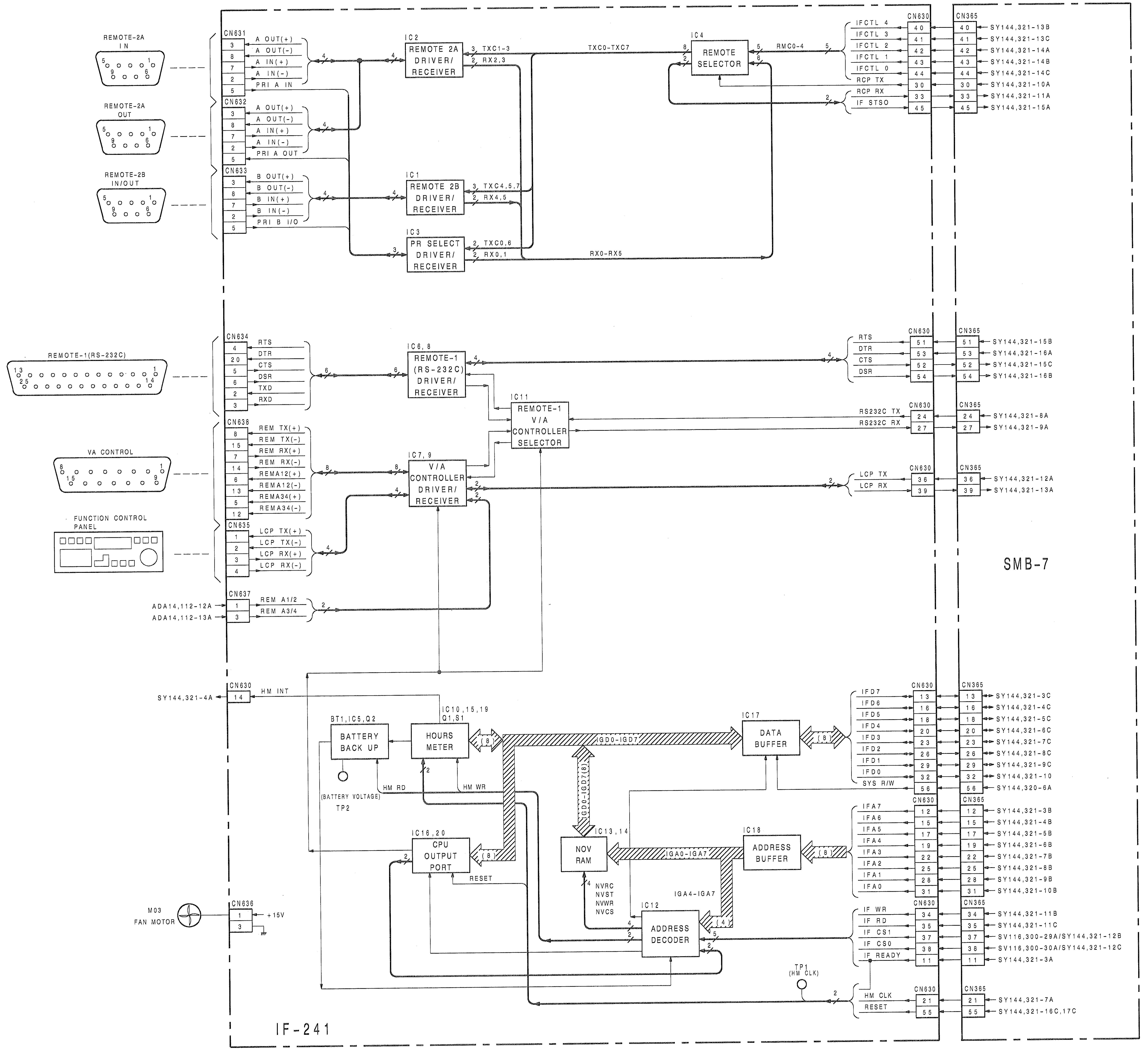
REMOTE-2A IN
REMOTE-2A OUT
REMOTE-2B IN/OUT
CN631
A OUT(+)
A OUT(-)
A IN(+)
A IN(-)
PRI A IN
CN632
PRI A OUT
CN633
B OUT(+)
B OUT(-)
B IN(+)
B IN(-)
PRI B I/O
IC2
REMOTE 2A DRIVER/ RECEIVER
TXC1-3
RX2,3
IC1
REMOTE 2B DRIVER/ RECEIVER
TXC4,5,7
RX4,5
IC3
PR SELECT DRIVER/ RECEIVER
TXC0,6
RX0,1
TXC0-TXC7
RX0-RX5
IC4
REMOTE SELECTOR
RMC0-4
IFCTL 4
IFCTL 3
IFCTL 2
IFCTL 1
IFCTL 0
RCP TX
RCP RX
IF STSO
CN630
CN365
SY144,321-13B
SY144,321-13C
SY144,321-14A
SY144,321-14B
SY144,321-14C
SY144,321-10A
SY144,321-11A
SY144,321-15A
REMOTE-1(RS-232C)
CN634
RTS
DTR
CTS
DSR
TXD
RXD
IC6, 8
REMOTE-1 (RS-232C) DRIVER/ RECEIVER
SY144,321-15B
SY144,321-16A
SY144,321-15C
SY144,321-16B
IC11
REMOTE-1 V/A CONTROLLER SELECTOR
RS232C TX
RS232C RX
SY144,321-8A
SY144,321-9A
VA CONTROL
CN638
REM TX(+)
REM TX(-)
REM RX(+)
REM RX(-)
REMA12(+)
REMA12(-)
REMA34(+)
REMA34(-)
IC7, 9
V/A CONTROLLER DRIVER/ RECEIVER
LCP TX
LCP RX
SY144,321-12A
SY144,321-13A
FUNCTION CONTROL PANEL
CN635
LCP TX(+)
LCP TX(-)
LCP RX(+)
LCP RX(-)
SMB-7
CN637
ADA14,112-12A
ADA14,112-13A
REM A1/2
REM A3/4
SY144,321-4A
HM INT
BT1,IC5,Q2
BATTERY BACK UP
(BATTERY VOLTAGE)
TP2
IC10,15,19 Q1,S1
HOURS METER
HM RD
HM WR
IGD0-IGD7
IGD0-IGD7(8)
IC17
DATA BUFFER
IFD7
IFD6
IFD5
IFD4
IFD3
IFD2
IFD1
IFD0
SYS R/W
SY144,321-3C
SY144,321-4C
SY144,321-5C
SY144,321-6C
SY144,321-7C
SY144,321-8C
SY144,321-9C
SY144,321-10
SY144,320-6A
IC16,20
CPU OUTPUT PORT
RESET
IC13,14
NOV RAM
NVRC
NVST
NVWR
NVCS
IGA0-IGA7
IGA4-IGA7
IC18
ADDRESS BUFFER
IFA7
IFA6
IFA5
IFA4
IFA3
IFA2
IFA1
IFA0
SY144,321-3B
SY144,321-4B
SY144,321-5B
SY144,321-6B
SY144,321-7B
SY144,321-8B
SY144,321-9B
SY144,321-10B
IC12
ADDRESS DECODER
IF WR
IF RD
IF CS1
IF CS0
IF READY
SY144,321-11B
SY144,321-11C
SV116,300-29A/SY144,321-12B
SV116,300-30A/SY144,321-12C
SY144,321-3A
TP1 (HM CLK)
HM CLK
RESET
SY144,321-7A
SY144,321-16C,17C
M03 FAN MOTOR
CN636
+15V
IF-241

IF-241 BLOCK DIAGRAM

HDV-10(J) ;#10001-
HDV-10(UC) ;#10001-
HDV-10(EK) ;#10001-

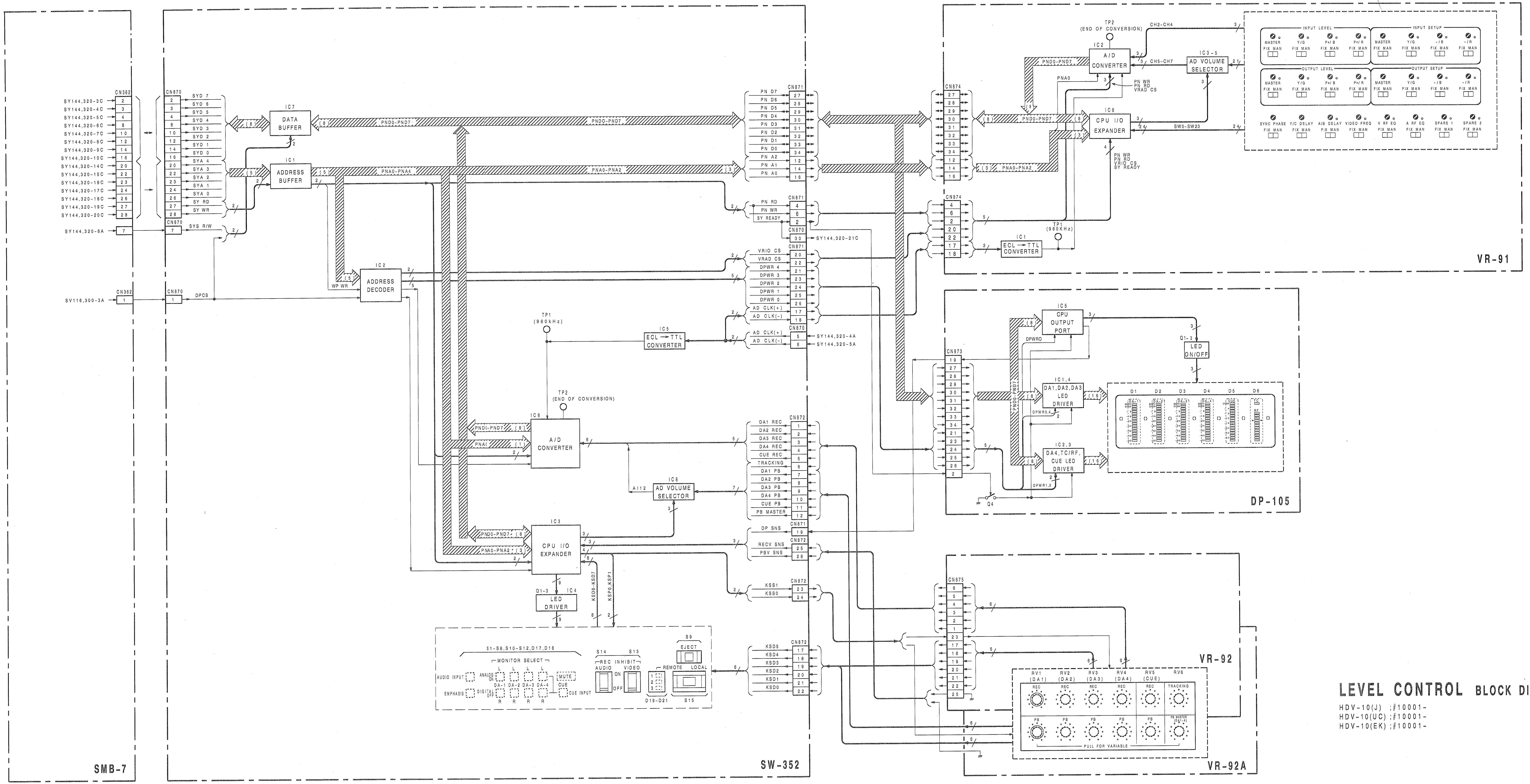
SMB-7
SW-352
VR-91
DP-105
VR-92
VR-92A
CN362
CN870
CN871
CN872
CN873
CN874
CN875
SY144,320-3C
SY144,320-6A
SY116,300-3A
SY144,320-21C
SY144,320-4A
SY144,320-5A
SYD 7
SYD 0
SYA 4
SYA 0
SY RD
SY WR
SYS R/W
DPCS
IC7 DATA BUFFER
IC1 ADDRESS BUFFER
PND0-PND7
PNA0-PNA4
PNA0-PNA2
IC2 ADDRESS DECODER
WP WR
PN D7
PN D0
PN A2
PN A1
PN A0
PN RD
PN WR
SY READY
VRIO CS
VRAD CS
DPWR 4
DPWR 0
AD CLK(+)
AD CLK(-)
IC5 ECL → TTL CONVERTER
TP1 (960kHz)
TP2 (END OF CONVERSION)
IC6 A/D CONVERTER
IC8 AD VOLUME SELECTOR
A112
IC3 CPU I/O EXPANDER
Q1-3 IC4 LED DRIVER
KSD0-KSD7
KSP0,KSP1
DA1 REC
DA2 REC
DA3 REC
DA4 REC
CUE REC
TRACKING
DA1 PB
DA2 PB
DA3 PB
DA4 PB
CUE PB
PB MASTER
DP SNS
RECV SNS
PBV SNS
KSS1
KSS0
KSD5
KSD0
S1-S8,S10-S12,D17,D18
MONITOR SELECT
AUDIO INPUT
EMPHASIS
ANALOG
DIGITAL
DA-1
DA-2
DA-3
DA-4
CUE
MUTE
CUE INPUT
S14
S13
REC INHIBIT
AUDIO
VIDEO
ON
OFF
S9 EJECT
REMOTE
LOCAL
D19-D21
S15
IC2 A/D CONVERTER
CH2-CH4
CH5-CH7
IC3-5 AD VOLUME SELECTOR
IC6 CPU I/O EXPANDER
SW0-SW23
PN WR
PN RD
VRAD CS
VRIO CS
IC1 ECL → TTL CONVERTER
INPUT LEVEL
INPUT SETUP
OUTPUT LEVEL
OUTPUT SETUP
MASTER
Y/G
PH/B
PH/R
-/B
-/R
FIX MAN
SYNC PHASE
Y/C DELAY
A/B DELAY
VIDEO FREQ
V RF EQ
A RF EQ
SPARE 1
SPARE 2
IC5 CPU OUTPUT PORT
DPWR0
Q1-3 LED ON/OFF
IC1,4 DA1,DA2,DA3 LED DRIVER
DPWR3,4
IC2,3 DA4,TC/RF, CUE LED DRIVER
DPWR1,2
D1
D2
D3
D4
D5
D6
Q4
RV1 (DA1)
RV2 (DA2)
RV3 (DA3)
RV4 (DA4)
RV5 (CUE)
RV6
REC
PB
TRACKING
PB MASTER
PULL FOR VARIABLE

LEVEL CONTROL BLOCK DIAGRAM

HDV-10(J) ;♯10001-
HDV-10(UC) ;♯10001-
HDV-10(EK) ;♯10001-

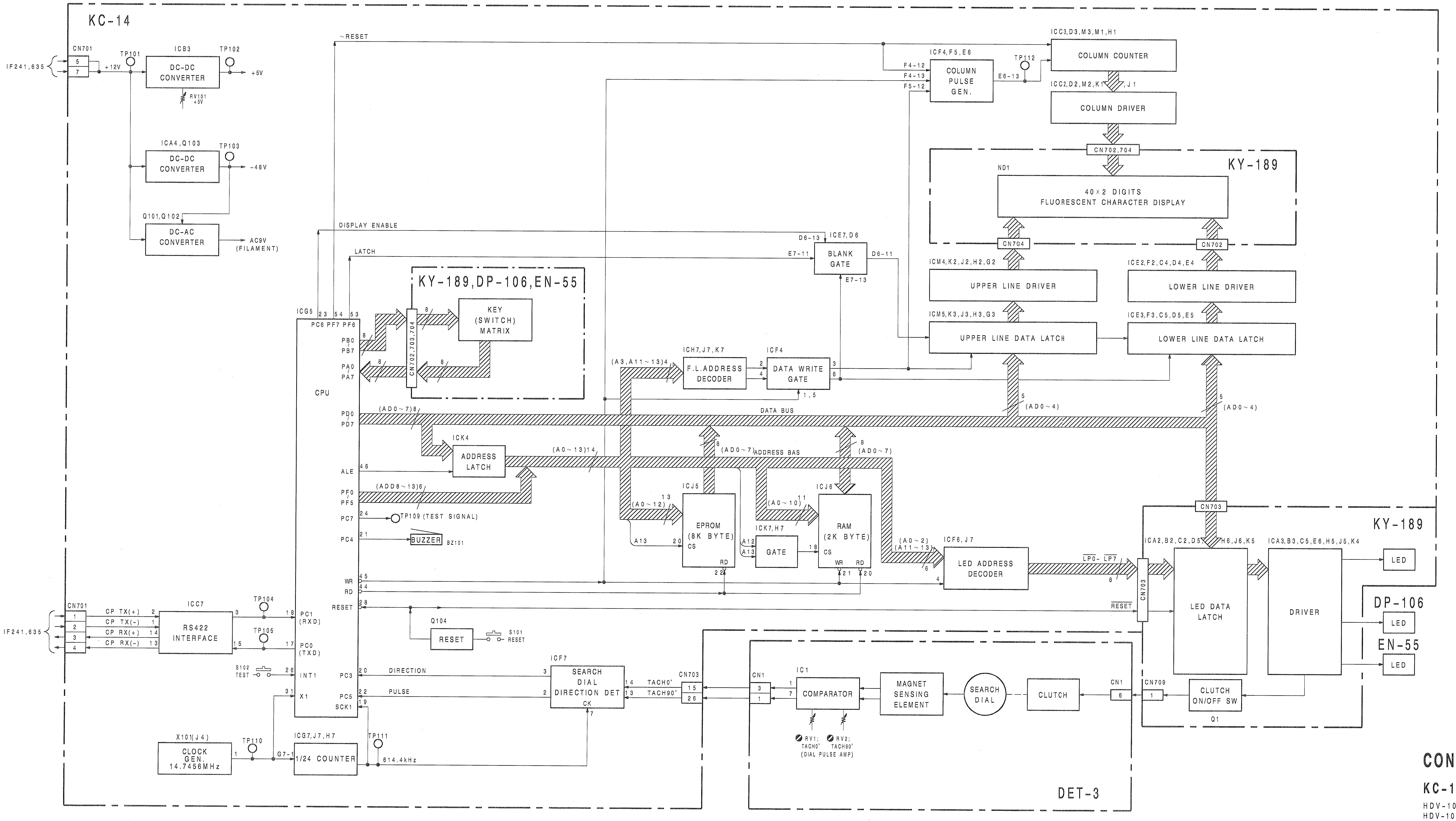
KC-14
IF241,635
CN701
TP101
+12V
ICB3
DC-DC CONVERTER
RV101 +5V
TP102
+5V
ICA4,Q103
TP103
DC-DC CONVERTER
-48V
Q101,Q102
DC-AC CONVERTER
AC9V (FILAMENT)
~RESET
DISPLAY ENABLE
LATCH
ICG5
23 54 53
PC6 PF7 PF6
CPU
PB0
PB7
PA0
PA7
CN702,703,704
KY-189,DP-106,EN-55
KEY (SWITCH) MATRIX
8
PD0
PD7
(AD0~7)8
ICK4
ADDRESS LATCH
(A0~13)14
ALE
46
PF0
PF5
(ADD8~13)6
PC7
24
TP109 (TEST SIGNAL)
PC4
21
BUZZER
BZ101
WR
RD
RESET
45
44
28
Q104
RESET
S101 RESET
ICC3,D3,M3,M1,H1
COLUMN COUNTER
ICF4,F5,E6
F4-12
F4-13
F5-12
COLUMN PULSE GEN.
E6-13
TP112
ICC2,D2,M2,K1
J1
COLUMN DRIVER
CN702,704
KY-189
ND1
40×2 DIGITS FLUORESCENT CHARACTER DISPLAY
CN704
CN702
D6-13
E7-11
ICE7,D6
BLANK GATE
D6-11
E7-13
ICM4,K2,J2,H2,G2
UPPER LINE DRIVER
ICE2,F2,C4,D4,E4
LOWER LINE DRIVER
ICM5,K3,J3,H3,G3
UPPER LINE DATA LATCH
ICE3,F3,C5,D5,E5
LOWER LINE DATA LATCH
ICH7,J7,K7
(A3,A11~13)4
F.L.ADDRESS DECODER
ICF4
DATA WRITE GATE
1,5
DATA BUS
5
(AD0~4)
(AD0~7)ADDRESS BAS
ICJ5
13
(A0~12)
EPROM (8K BYTE)
CS
RD
A13
20
22
A12
A13
ICK7,H7
GATE
18
ICJ6
11
(A0~10)
RAM (2K BYTE)
CS
WR
RD
21
20
(A0~2)
(A11~13)
ICF6,J7
LED ADDRESS DECODER
LP0~LP7
CN703
KY-189
ICA2,B2,C2,D5
H6,J6,K5
ICA3,B3,C5,E6,H5,J5,K4
LED DATA LATCH
DRIVER
LED
DP-106
LED
EN-55
LED
RESET
CLUTCH ON/OFF SW
Q1
CN709
CN1
CLUTCH
SEARCH DIAL
MAGNET SENSING ELEMENT
IC1
COMPARATOR
RV1; TACHO°
RV2; TACH90°
(DIAL PULSE AMP)
DET-3
CN701
CP TX(+)
CP TX(-)
CP RX(+)
CP RX(-)
ICC7
RS422 INTERFACE
TP104
TP105
PC1 (RXD)
PC0 (TXD)
S102 TEST
INT1
X1
PC3
PC5
SCK1
DIRECTION
PULSE
ICF7
SEARCH DIAL DIRECTION DET
CK
TACHO°
TACH90°
CN703
X101(J4)
CLOCK GEN. 14.7456MHz
TP110
G7-1
ICG7,J7,H7
1/24 COUNTER
TP111
614.4kHz

CONTROL PANEL BLOCK DIAGRAM

KC-14,KY-189,DP-106,EN-55,DET-3

HDV-10(J) ;#10001-
HDV-10(UC) ;#10001-
HDV-10(EK) ;#10001-

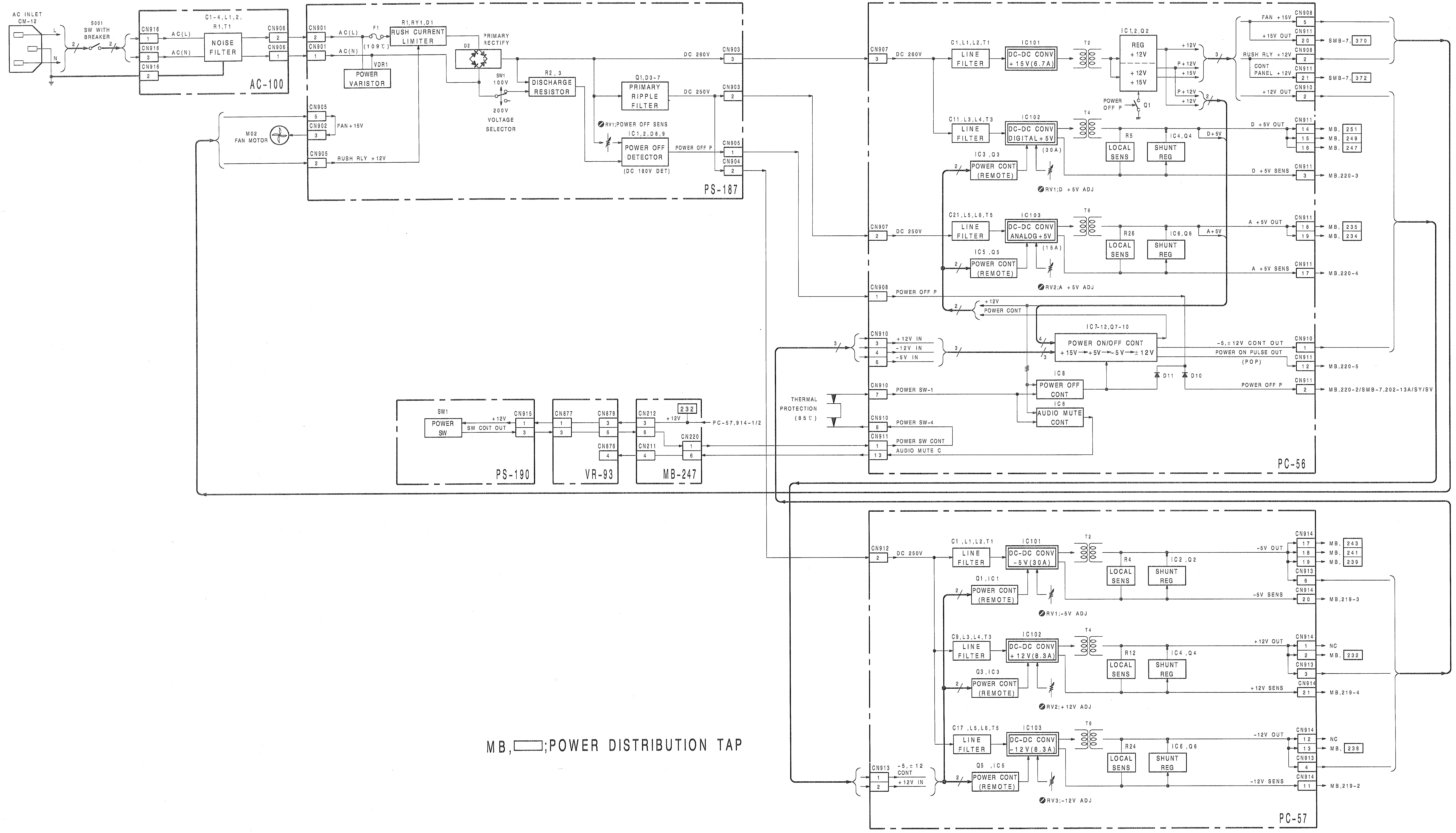
AC INLET
CM-12
S001
SW WITH BREAKER
C1-4,L1,2,
R1,T1
NOISE FILTER
CN916
CN906
AC(L)
AC(N)
AC-100
CN901
F1
(109°C)
R1,RY1,D1
RUSH CURRENT LIMITER
VDR1
POWER VARISTOR
PRIMARY RECTIFY
D2
SW1
100V
200V
VOLTAGE SELECTOR
R2,3
DISCHARGE RESISTOR
Q1,D3-7
PRIMARY RIPPLE FILTER
DC 260V
DC 250V
CN903
RV1;POWER OFF SENS
IC1,2,D8,9
POWER OFF DETECTOR
(DC 180V DET)
POWER OFF P
CN905
CN904
CN902
FAN +15V
RUSH RLY +12V
M02
FAN MOTOR
PS-187
CN907
C1,L1,L2,T1
LINE FILTER
IC101
DC-DC CONV +15V(6.7A)
T2
IC1,2,Q2
REG +12V
+12V
+15V
POWER OFF P
Q1
P+12V
P+15V
CN908
FAN +15V
CN911
+15V OUT
RUSH RLY +12V
CONT PANEL +12V
+12V OUT
CN910
SMB-7, 370
SMB-7, 372
C11,L3,L4,T3
IC102
DC-DC CONV DIGITAL+5V
(30A)
T4
R5
IC4,Q4
LOCAL SENS
SHUNT REG
D+5V
D +5V OUT
MB, 251
MB, 249
MB, 247
IC3,Q3
POWER CONT (REMOTE)
RV1;D +5V ADJ
D +5V SENS
MB,220-3
C21,L5,L6,T5
IC103
DC-DC CONV ANALOG+5V
(15A)
T6
R26
IC6,Q6
A+5V
A +5V OUT
MB, 235
MB, 234
IC5,Q5
RV2;A +5V ADJ
A +5V SENS
MB,220-4
CN906
POWER OFF P
+12V
POWER CONT
IC7-12,Q7-10
POWER ON/OFF CONT
+15V→+5V→-5V→±12V
+12V IN
-12V IN
-5V IN
-5,±12V CONT OUT
POWER ON PULSE OUT
(POP)
MB,220-5
IC8
POWER OFF CONT
D11
D10
POWER OFF P
MB,220-2/SMB-7,202-13A/SY/SV
POWER SW-1
THERMAL PROTECTION
(85°C)
IC8
AUDIO MUTE CONT
POWER SW-4
POWER SW CONT
AUDIO MUTE C
PC-56
SW1
POWER SW
+12V
SW CONT OUT
CN915
CN877
CN878
CN876
CN212
CN211
CN220
232
PC-57,914-1/2
PS-190
VR-93
MB-247
CN912
C1,L1,L2,T1
IC101
DC-DC CONV -5V(30A)
T2
R4
IC2,Q2
-5V OUT
CN914
CN913
MB, 243
MB, 241
MB, 239
Q1,IC1
RV1;-5V ADJ
-5V SENS
MB,219-3
C9,L3,L4,T3
IC102
DC-DC CONV +12V(8.3A)
T4
R12
IC4,Q4
+12V OUT
NC
MB, 232
Q3,IC3
RV2;+12V ADJ
+12V SENS
MB,219-4
C17,L5,L6,T5
IC103
DC-DC CONV -12V(8.3A)
T6
R24
IC6,Q6
-12V OUT
NC
MB, 238
Q5,IC5
RV3;-12V ADJ
-12V SENS
MB,219-2
-5,±12 CONT
+12V IN
PC-57
MB, ▭ ;POWER DISTRIBUTION TAP

POWER SUPPLY BLOCK DIAGRAM

HDV-10(J) ;♯10001-
HDV-10(UC) ;♯10001-
HDV-10(EK) ;♯10001-

SECTION 19
SCHEMATIC DIAGRAM

	Board	Function	Page
A	ADA-14 (1/6)	Audio A/D Converter CH1/2	19-61
	ADA-14 (2/6)	Audio A/D Converter CH3/4	19-63
	ADA-14 (3/6)	Audio D/A Converter CH1/2	19-65
	ADA-14 (4/6)	Audio D/A Converter CH3/4	19-67
	ADA-14 (5/6)	Audio D/A Converter Monitor L/R	19-69
	ADA-14 (6/6)	Digital I/O, Peak Meter, CPU I/O	19-71
	AE-08 (1/2)	Rec/Play Block	19-99
	AE-08 (2/2)	Control & Erase Block	19-101
D	DEC-50 (1/6)	Data Recovery A	19-73
	DEC-50 (2/6)	TBC Memory A	19-75
	DEC-50 (3/6)	Data Recovery B	19-77
	DEC-50 (4/6)	TBC Memory B	19-79
	DEC-50 (5/6)	Error Correction	19-81
	DEC-50 (6/6)	CPU Interface	19-83
	DM-77A/77B (1/2)	Video RF Amp/Audio RF Amp	19-5
	DM-77A/77B (2/2)	Video FM Demodurator/WFM Select Block	19-7
	DP-105	Audio Level Meter	19-131
E	ED-23 (1/4)	Sync PLL/Bus /Edit/Test/Address Generator	19-91
	ED-23 (2/4)	Audio Bus Diagnostic	19-93
	ED-23 (3/4)	Internal Audio Data Block/Coefficient Data Block	19-95
	ED-23 (4/4)	Average CH Detector/Hold CH Generator	19-97
	ENC-12 (1/3)	Parity Generator	19-85
	ENC-12 (2/3)	CPU Interface	19-87
	ENC-12 (3/3)	8-14 Modulator	19-89
F	FRAME WIRING	CASSETTE COMPARTMENT TAPE TRANSPORT (AH-22, CL-21, LMP-5, PC-17, PD-35, SE-117, SW-435, TE-2, TR-58)	19-173
	FRAME WIRING	CONNECTOR PANEL	19-179
	FRAME WIRING	FUNCTION CONTROL PANEL	19-177
	FRAME WIRING	LEVEL CONTROL/REMOTE CONTROL	19-175
	FRAME WIRING	POWER SUPPLY	19-181
H	HEAD DRUM	(DR-90, DR-126, DR-127, DR-128)	19-3
I	IF-241	Remote-1, 2A, 2B/VA Control	19-125
	IO-43	Video/Sync Input Buffer	19-139
	IO-44	Video/Sync Output Buffer	19-141
	IO-53	Character Mix Video Monitor Out	19-143
	IO-45/45A	Analog Audio Interface	19-145
	IO-46/46A	Digital Audio Interface	19-147
	IPR-1 (1/7)	Y, PB, PR ch A/D Converter	19-15
	IPR-1 (2/7)	Chroma Vertical Filter	19-17
	IPR-1 (3/7)	1.5 Frame Memory & 3H Delay Memory	19-19
	IPR-1 (4/7)	A, B ch D/A Converter	19-21
	IPR-1 (5/7)	Control Pulse Generator	19-23
	IPR-1 (6/7)	Clock Generator & Chroma PLL	19-25
	IPR-1 (7/7)	Signal Generator & WFM D/A Converter	19-27
	IV-23 (1/2)	Input AGC/Matrix	19-57
	IV-23 (2/2)	Wave Form Process	19-59
K	KY-189 (1/2)	FUNCTION CONTROL PANEL (1/2)	19-135
	KY-189 (2/2)	FUNCTION CONTROL PANEL (2/2)	19-137
M	MB-247 (1/4)	Mother Board	19-155
	MB-247 (2/4)	Mother Board	19-157
	MB-247 (3/4)	Mother Board	19-159
	MB-247 (4/4)	Mother Board	19-161
	MD-65 (1/2)	FM Modulator	19-9
	MD-65 (2/2)	MOD Control	19-11
P	POWER SUPPLY (1/2)		19-151
	POWER SUPPLY (2/2)		19-153
R	RE-70	Rec/Erase Head Amp	19-13
	RM-68 (1/2)	Servo Sub Controller	19-111
	RM-68 (2/2)	Servo Sensor Interface	19-113
S	SG-169 (1/3)	Video Control Interface	19-51
	SG-169 (2/3)	Gen, Lock/Ref Sync Generator	19-53
	SG-169 (3/3)	TCI Sync Generator	19-55
	SMB-7 (1/3)	Sub Mother Board	19-163
	SMB-7 (2/3)	Sub Mother Board	19-165
	SMB-7 (3/3)	Sub Mother Board	19-167
	SMB-8 (1/2)	Connector Panel Mother Board	19-169
	SMB-8 (2/2)	Connector Panel Mother Board	19-171
	SV-116 (1/4)	Servo CPU	19-103
	SV-116 (2/4)	CPU Peridpheral	19-105
	SV-116 (3/4)	EXT. System Bus	19-107
	SV-116 (4/4)	Pulse Processor Motor Driver	19-109
	SW-352	Audio Monitor Select	19-133
	SY-144 (1/5)	Remote Control Panel CPU	19-115
	SY-144 (2/5)	System CPU	19-117
	SY-144 (3/5)	Memory	19-119
	SY-144 (4/5)	PLL, System Clock	19-121
	SY-144 (5/5)	TC Read. TC GEN. Character GEN.	19-123
T	TBC-14 (1/3)	Ach Video A/D Converter, Write Clock Generator	19-29
	TBC-14 (2/3)	Bch Video A/D Converter, Write Clock Generator	19-31
	TBC-14 (3/3)	Wave Form Monitor Select	19-33
	TBC-15 (1/8)	A Data S-P Convert	19-35
	TBC-15 (2/8)	B Data S-P Convert	19-37
	TBC-15 (3/8)	Deshuffle Memory	19-39
	TBC-15 (4/8)	Y. Process	19-41
	TBC-15 (5/8)	PB PR Process	19-43
	TBC-15 (6/8)	Memory Control	19-45
	TBC-15 (7/8)	Clock Distribution	19-47
	TBC-15 (8/8)	V Pulse Interface	19-49
V	VR-91	Video Level Control	19-127
	VR-92/92A	Audio REC Volume/Audio PB Volume	19-129
	VR-93	Headphone/Remote Jack	19-149

BOARD: NO MARK→MOUNTED CIRCUIT BOARD
　　　＊＊　→PRINTED CIRCUIT BOARD

BLOCK	BOARD	CIRCUIT FUNCTION	LOCATION	SUPPLY CODE
HEAD DRUM	DR-90	PB HEAD AMP	DRUM (UPPER)	U UPPER DRUM : S
	DR-126 **	BRUSH ASSY	DRUM (UPPER)	U BRUSH ASSY : S
	DR-127 **	FLANGE ASSY	DRUM (LOWER)	U DRUM ASSY : S
	DR-128 **	STATOR ASSY	DRUM (LOWER)	U DRUM ASSY : S
RF	DM-77A/77B	A CH PB HEAD EQ/B CH PB HEAD EQ	CARD RACK ② X 2	0 for service DM-77 COMPL(S)
	MD-65	MODULATOR, RF SWITCH	CARD RACK ②	0
	RE-70	REC/ERASE HEAD AMP	UPPER SW REG	0
DIGITAL VIDEO PROCESS	IPR-1	VIDEO A/D, TCI CONVERT, D/A	CARD RACK ①	0
	TBC-14	VIDEO A/D CONVERT, WRITE CK GEN.	CARD RACK ①	0
	TBC-15	TCI RECONVERT, LINE TBC	CARD RACK ①	0
	SG-169	VIDEO CLOCK GEN.	CARD RACK ①	0
VIDEO	IV-23	INPUT AGC/MATRIX, WAVE FORM	CARD RACK ②	0
DIGITAL AUDIO PROCESS	ADA-14	AUDIO A/D, D/A CONV.	CARD RACK ①	0
	DEC-50	AUDIO DEC., ERROR CORRECTION	CARD RACK ①	0
	ENC-12	AUDIO ENC., PARITY GEN.	CARD RACK ③	0
	ED-23	AUDIO/SYS/SERVO CLOCK GEN. AUDIO DATA BUS CONTROL & DIAGNOSIS	CARD RACK ③	0
AUDIO & LONGITUDE	AE-08	CUE, TC, CTL REC/PB AMP ERASE HEAD AMP	CARD RACK ③	0
SERVO	SV-116	SERVO MAIN	CARD RACK ③	0
	RM-68	SERVO SUB CONTROL,SENSOR INTERFACE	UNDER TTP	0
SYSCON	SY-144	SYSTEM CONTROL	CARD RACK ③	0
	IF-241	REMOTE-1/2A/2B, VA CONTROL	REAR PANEL	0
LEVEL CONTROL	VR-91	VIDEO LEVEL CONTROL	FRONT	0
	VR-92/92A	AUDIO REC VR/AUDIO PB VR	FRONT PANEL X 2	0
	DP-105	AUDIO LEVEL METER	〃	0
	SW-352	AUDIO MONITOR SELECT	〃	0
FUNCTION CONTROL PANEL	KY-189	MAIN KEY	CONTROL PANEL	0
	KC-14	KEY CONTROL	〃	0 Only Difference of ROM from HDD-1000
	DP-106	SUB KEY	〃	U P.C.B.: 0
	EN-55	ENTRY KEY	〃	U P.C.B.:0(Same As HDD-1000)
	DET-3	SEARCH DIAL DETECTOR	〃	U P.C.B.:0(Same As HDD-1000)
CONNECTOR PANEL	IO-43	VIDEO/SYNC INPUT BUFFER	REAR	0
	IO-44	VIDEO/SYNC OUTPUT BUFFER	〃	0
	IO-53	CHARACTER MIX, VIDEO MONITOR OUT	〃	0
	IO-45 J IO-45A UC EK	AUDIO ANALOG IN/OUT AUDIO MONITOR R OUT	〃	0 0
	IO-46 J IO-46A UC EK	AUDIO DIGITAL, TC, CUE IN/OUT MONITOR L OUT	〃	0 0
	VR-93	HEADPHONE/REMOTE JACK	SW PANEL (FRONT)	0
POWER	PS-187	RECTIFIER	RIGHT SIDE	0
	PC-56	+5V(D), +5V(A), +15V SW REG.	〃	0
	PC-57	-5V, +12V, -12V SW REG.	〃	0
	AC-100	AC LINE FILTER	〃	0
	PS-190	POWER SW	SW PANEL (FRONT)	U P.C.B.: 0
MOTHER	MB-247	MAIN MOTHER	CARD RACK ①, ②	0
	SMB-7	SUB MOTHER	CARD RACK ③	0
	SMB-8	CONNECTOR PANEL MOTHER	REAR	0
FRAME WIRING		TAPE TRANSPORT/CASSETTE COMPARTMENT		
	SW-435	CASSETTE COMPARTMENT SWITCH	TTP	U P.C.B.: 0
	TR-58	TENSION SENSOR	〃	U P.C.B.: 0
	PC-17 **	UNSLED END DETECT	〃	- P.C.B.: 0(Same As BVW-10)
	SE-117 **	TAPE (END/TOP) SENSOR RADIATION	〃	- TE SENSOR ASSY: S
	PD-35 **	PRESS PINCH	〃	- P.C.B.: 0(Same As BVW-75)
	CL-21	CASSETTE COMPARTMENT CONNECTION	CASSETTE COMP.	U P.C.B.: 0
	LMP-5	CASSETTE COMPARTMENT ILLUMINATION	〃	U P.C.B.: 0
	PC-17 **	CASSETTE IN/DOWN/UP SENSOR	〃 X 3	- P.C.B.: 0(Same As BVW-10)
	TE-2 **	TAPE END/TOP SENSOR	〃 X 2	- P.C.B.: 0(Same As GDX-10)
		LEVEL/REMOTE CONTROL	FRONT/REAR	
		FUNCTION CONTROL PANEL	FRONT	
		CONNECTOR PANEL	REAR/SW PANEL	
		POWER SUPPLY	RIGHT SIDE	
EXTENSION	EX-211	FOR CARD RACK ①	PACKING	0
	EX-212	FOR CARD RACK ②	〃	0
	EX-213	FOR CARD RACK ③	〃	0

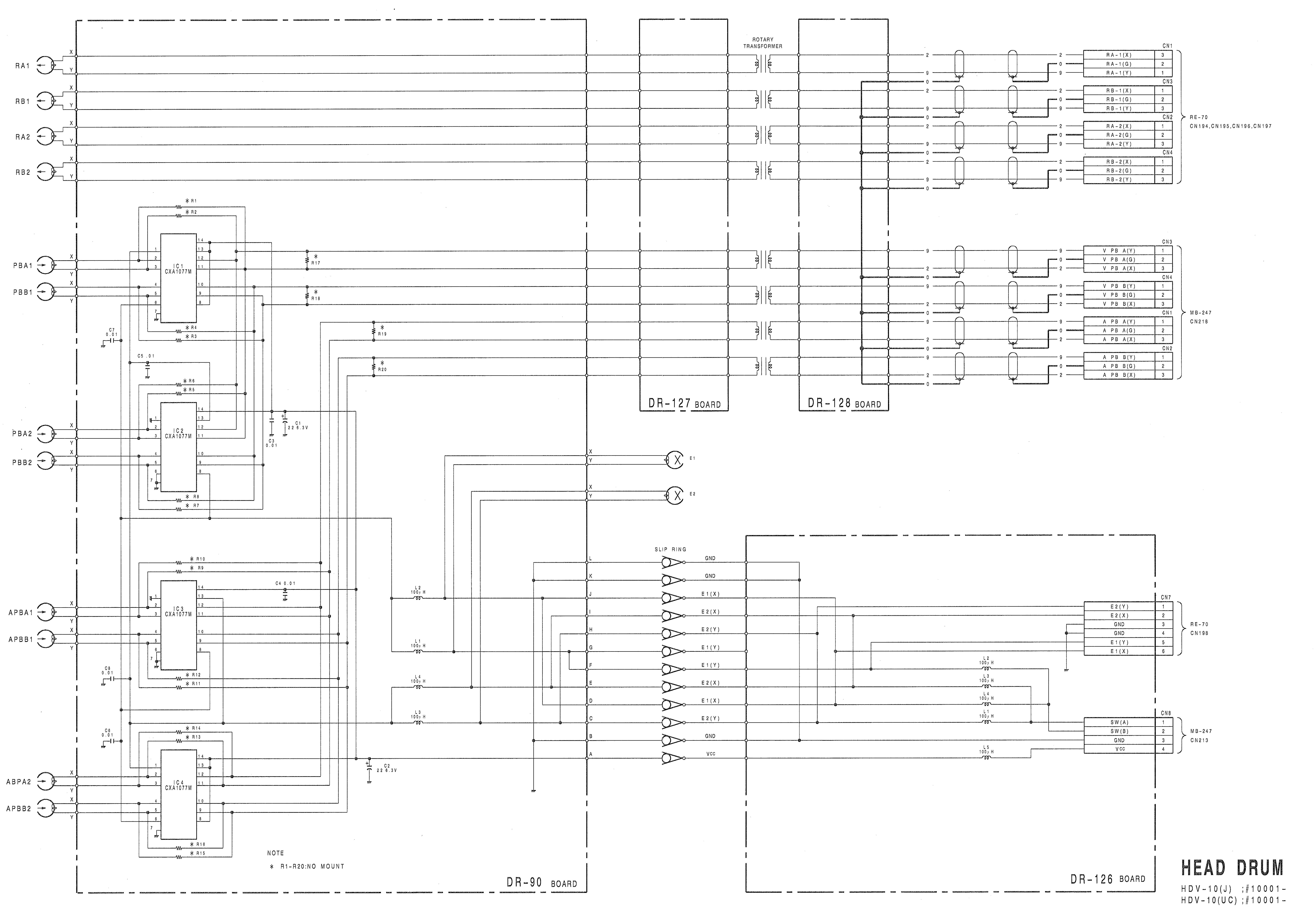
RA1
RB1
RA2
RB2
PBA1
PBB1
PBA2
PBB2
APBA1
APBB1
ABPA2
APBB2
IC1 CXA1077M
IC2 CXA1077M
IC3 CXA1077M
IC4 CXA1077M
* R1-R20:NO MOUNT
NOTE
DR-90 BOARD
DR-127 BOARD
DR-128 BOARD
DR-126 BOARD
ROTARY TRANSFORMER
SLIP RING
E1
E2
GND
E1(X)
E2(X)
E2(Y)
E1(Y)
VCC
RA-1(X)
RA-1(G)
RA-1(Y)
RB-1(X)
RB-1(G)
RB-1(Y)
RA-2(X)
RA-2(G)
RA-2(Y)
RB-2(X)
RB-2(G)
RB-2(Y)
RE-70 CN194,CN195,CN196,CN197
V PB A(Y)
V PB A(G)
V PB A(X)
V PB B(Y)
V PB B(G)
V PB B(X)
A PB A(Y)
A PB A(G)
A PB A(X)
A PB B(Y)
A PB B(G)
A PB B(X)
MB-247 CN215
CN7
RE-70 CN196
CN8
SW(A)
SW(B)
MB-247 CN213
C1 22 6.3V
C2 22 6.3V
C4 0.01
C5 .01
L1 100μH
L2 100μH
L3 100μH
L4 100μH
L5 100μH
1
2
3
4
5
A
B
C
D
E
F
G
H

HEAD DRUM

HDV-10(J) ;#10001-
HDV-10(UC) ;#10001-
HDV-10(EK) ;#10001-

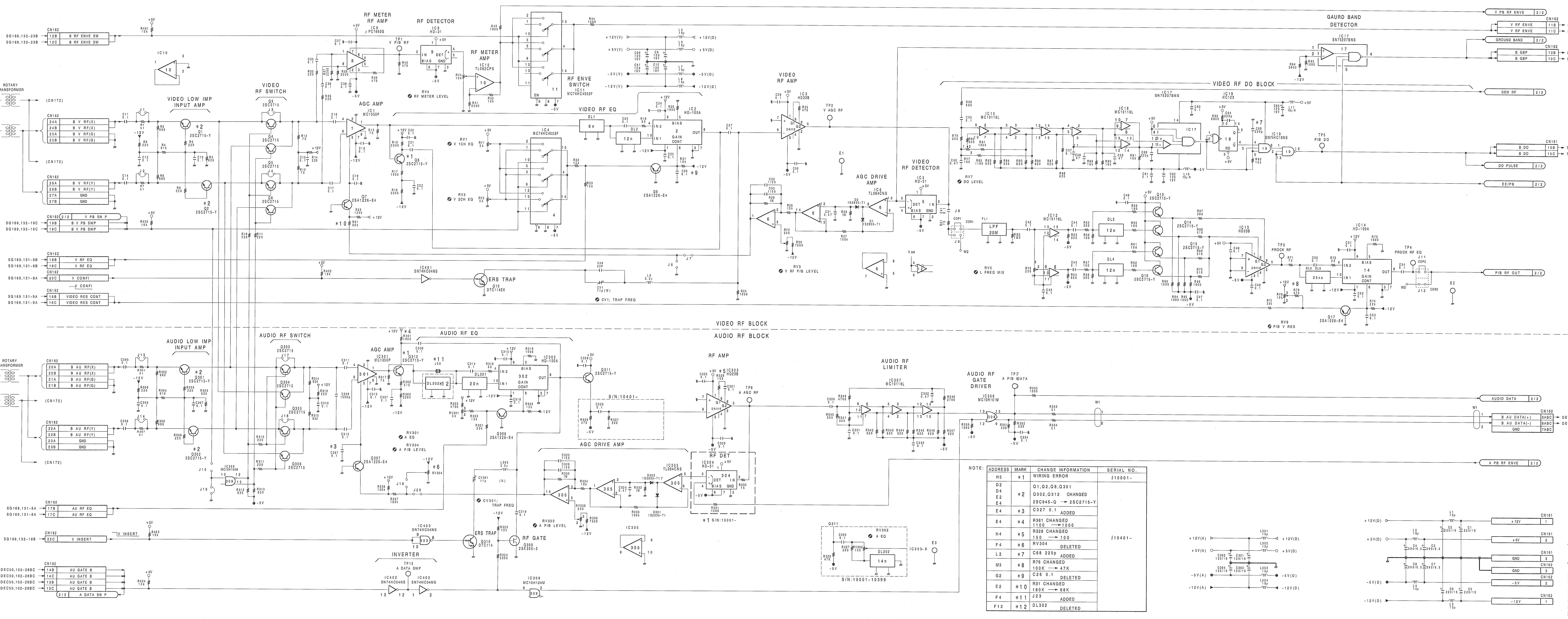
ROTARY TRANSFORMER
DR-90
VIDEO LOW IMP INPUT AMP
VIDEO RF SWITCH
AGC AMP
RF METER RF AMP
RF DETECTOR
RF METER AMP
RF ENVE SWITCH
VIDEO RF EQ
VIDEO RF AMP
AGC DRIVE AMP
VIDEO RF DETECTOR
GAURD BAND DETECTOR
VIDEO RF DO BLOCK
ERS TRAP
VIDEO RF BLOCK
AUDIO RF BLOCK
AUDIO LOW IMP INPUT AMP
AUDIO RF SWITCH
AUDIO RF EQ
RF AMP
AUDIO RF LIMITER
AUDIO RF GATE DRIVER
AGC DRIVE AMP
RF DET
RF GATE
INVERTER
V PB RF ENVE
DEM RF
DO PULSE
EE/PB
P/B RF OUT
AUDIO DATA
A PB RF ENVE
RV1 V 1CH EQ
RV2 V 2CH EQ
RV3 V RF P/B LEVEL
RV4 RF METER LEVEL
RV5 L FREQ MIX
RV6 P/B V RES
RV7 DO LEVEL
RV301 A EQ
RV303 A P/B LEVEL
CV1 TRAP FREQ
S/N:10401-
S/N:10001-10399
A B C D E F G H I J K L M N O
1 2 3 4 5

NOTE:

ADDRESS	MARK	CHANGE INFORMATION	SERIAL NO.
H5	*1	WIRING ERROR	#10001-
D2 D4 E2 E4	*2	Q1,Q2,Q8,Q301 Q302,Q312 CHANGED 2SC945-Q → 2SC2715-Y	#10401-
E4	*3	C327 0.1 ADDED	
E4	*4	R361 CHANGED 1100 → 1000	
H4	*5	R328 CHANGED 150 → 100	
F4	*6	RV304 DELETED	
L2	*7	C68 220p ADDED	
M3	*8	R76 CHANGED 100K → 47K	
G2	*9	C26 0.1 DELETED	
E2	*10	R31 CHANGED 180K → 68K	
F4	*11	J23 ADDED	
F12	*12	DL302 DELETED	

Video RF Amp
Audio RF Amp

DM-77A/77B BOARD (1/2)

BOARD NO.1-634-495-11,12,13
HDV-10(J) ;#10001-
HDV-10(UC) ;#10001-
HDV-10(EK) ;#10001-

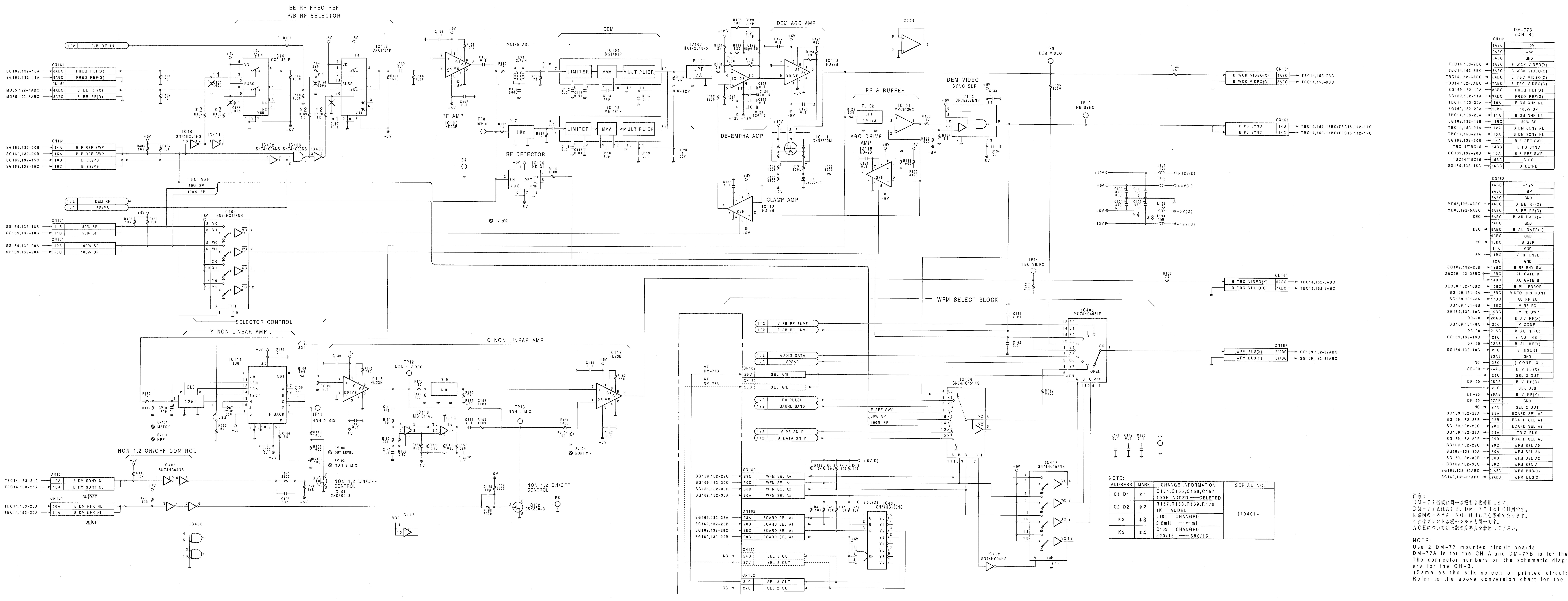
EE RF FREQ REF
P/B RF SELECTOR
RF AMP
MOIRE ADJ
DEM
LIMITER
MMV
MULTIPLIER
DEM AGC AMP
DE-EMPHA AMP
RF DETECTOR
LPF & BUFFER
AGC DRIVE AMP
CLAMP AMP
DEM VIDEO SYNC SEP
TP9 DEM VIDEO
TP10 PB SYNC
TP14 TBC VIDEO
SELECTOR CONTROL
Y NON LINEAR AMP
C NON LINEAR AMP
TP12 NON 1 VIDEO
TP11 NON 2 MIX
TP13 NON 1 MIX
NON 1,2 ON/OFF CONTROL
WFM SELECT BLOCK
DM-77B (CH B)
DM-77A (CH A)

NOTE:

ADDRESS	MARK	CHANGE INFORMATION	SERIAL NO.
C1 D1	*1	C154,C155,C156,C157 100P ADDED ⟶ DELETED	#10401-
C2 D2	*2	R167,R168,R169,R170 1K ADDED	
K3	*3	L104 CHANGED 2.2mH ⟶ 1mH	
K3	*4	C103 CHANGED 220/16 ⟶ 680/16	

注意；
DM－77基板は同一基板を２枚使用します。
DM－77AはACH，DM－77BはBCH用です。
回路図のコネクターNO．はBCHを載せてあります。
これはプリント基板のシルクと同一です。
ACHについては上記の変換表を参照して下さい。

NOTE;
Use 2 DM-77 mounted circuit boards.
DM-77A is for the CH-A,and DM-77B is for the CH-B.
The connector numbers on the schematic diagram are for the CH-B.
(Same as the silk screen of printed circuit board.)
Refer to the above conversion chart for the CH-A.

Video FM Demodurator
WFM Select Block

DM-77A/77B BOARD (2/2)

BOARD NO.1-634-495-11,12,13
HDV-10(J) ;#10001-
HDV-10(UC) ;#10001-
HDV-10(EK) ;#10001-

LPF(D/A OUT)
Y NON LINEAR EMPHASIS
C NON LINEAR EMPHASIS
DEVIATION ADJUST
LINEAR EMPHASIS & LEVEL SHIFT
VIDEO MODULATOR
VIDEO/AUDIO RF SWITCH
RF AMP
AUDIO RF AMP & DC OFFSET CANCELER
VIDEO CLAMP
CN191
CN192
CN193
RV101;CH-A VIDEO LEVEL
RV102;CH-A VIDEO LEVEL
RV105;CH-A NHK NON LINEAR MIX LEVEL
RV106;CH-A CARRIER BALANCE
RV107;CH-A VIDEO RF LEVEL
RV301;CH-A AUDIO RF LEVEL
RV201;CH-B VIDEO LEVEL
RV202;CH-B VIDEO LEVEL
RV205;CH-B NHK NON LINEAR MIX LEVEL
RV206;CH-B CARRIER BALANCE
RV207;CH-B VIDEO RF LEVEL
RV302;CH-B AUDIO RF LEVEL
GAIN
DRIVE CURRENT
HD-23B
A
B
C
D
E
F
G
H
I
J
K
L
M
N
O
1
2
3
4
5

NOTE;

ADDRESS	MARK	CHANGE INFORMATION	SERIAL NO.
K1,K3	*1	IC109,IC209 CHANGED HD-9B → HD-9C	#10701-
K1,K3	*2	R140,R240 CHANGED 1.5K → 8.2K R152,R252 18K DELETED	#11601-

FM Modulator

MD-65 BOARD (1/2)

BOARD NO.1-634-497-11,12
HDV-10(J) ;#10001-
HDV-10(UC) ;#10001-
HDV-10(EK) ;#10001-

REC RF SWITCHING TIMING GEN.
REC SWITCH PULSE GEN
WAVEFORM MONITOR SELECTOR
WAVEFORM MONITOR SELECTOR
SAMPLE PULSE GENERATOR
MODULATOR CLAMP PULSE GEN
S/N:10001-
SUB DEMOD INPUT SELECTOR
SUB DEMOD
LIMITER 1
MMV
MULTIPLIER
LPF
LIMITER 2
VIDEO AMP
VIDEO &SLICE
FREQUENCY REF.
255 LEVEL HOLD
127 LEVEL HOLD
AGC/AFC HOLD AMP
EE RF SWITCH
S/N:10001-10199
1
2
3
4
5

MOD Control

MD-65 BOARD (2/2)

BOARD NO.1-634-497-11,12
HDV-10(J) ;#10001-
HDV-10(UC) ;#10001-
HDV-10(EK) ;#10001-

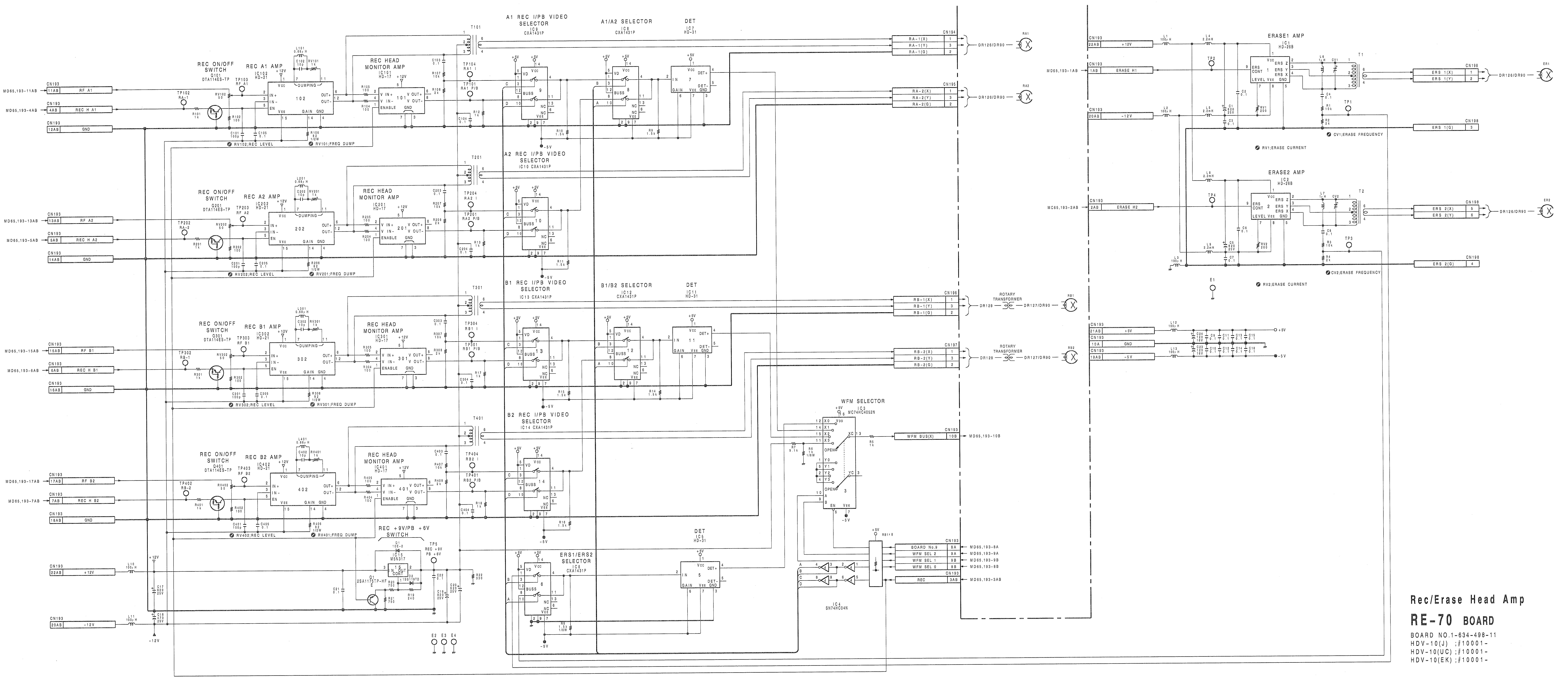
A1 REC I/PB VIDEO SELECTOR
IC9 CXA1431P
A1/A2 SELECTOR
IC8 CXA1431P
DET
IC7 HD-31
REC ON/OFF SWITCH
Q101 DTA114ES-TP
REC A1 AMP
IC102 HD-21
REC HEAD MONITOR AMP
IC101 HD-17
T101
TP104 RA1 I
TP101 RA1 P/B
CN193
MD65,193-11AB
MD65,193-4AB
RF A1
REC H A1
GND
RV102;REC LEVEL
RV101;FREQ DUMP
CN194
RA-1(X)
RA-1(Y)
RA-1(G)
CN195
RA-2(X)
RA-2(Y)
RA-2(G)
DR126/DR90
RA1
RA2
A2 REC I/PB VIDEO SELECTOR
IC10 CXA1431P
REC A2 AMP
IC202 HD-21
Q201 DTA114ES-TP
IC201 HD-17
T201
MD65,193-13AB
MD65,193-5AB
RF A2
REC H A2
RV202;REC LEVEL
RV201;FREQ DUMP
B1 REC I/PB VIDEO SELECTOR
IC13 CXA1431P
B1/B2 SELECTOR
IC12 CXA1431P
DET
IC11 HD-31
REC B1 AMP
IC302 HD-21
Q301 DTA114ES-TP
IC301 HD-17
T301
MD65,193-15AB
MD65,193-6AB
RF B1
REC H B1
RV302;REC LEVEL
RV301;FREQ DUMP
CN196
RB-1(X)
RB-1(Y)
RB-1(G)
CN197
RB-2(X)
RB-2(Y)
RB-2(G)
ROTARY TRANSFORMER
DR128
DR127/DR90
RB1
RB2
B2 REC I/PB VIDEO SELECTOR
IC14 CXA1431P
REC B2 AMP
IC402 HD-21
Q401 DTA114ES-TP
IC401 HD-17
T401
MD65,193-17AB
MD65,193-7AB
RF B2
REC H B2
RV402;REC LEVEL
RV401;FREQ DUMP
REC +9V/PB +6V SWITCH
IC15 M5N317
Q1 2SA1175TP-HF
TP5 REC +9V PB +6V
MD65,193-22AB
MD65,193-20AB
+12V
-12V
E2 E3 E4
ERS1/ERS2 SELECTOR
IC6 CXA1431P
DET
IC5 HD-31
WFM SELECTOR
IC3 MC74HC4052N
WFM BUS(X)
MD65,193-10B
BOARD No.0
WFM SEL 2
WFM SEL 1
WFM SEL 0
REC
MD65,193-8A
MD65,193-9A
MD65,193-9B
MD65,193-8B
MD65,193-3AB
IC4 SN74HC04N
ERASE1 AMP
IC1 HD-26B
MD65,193-1AB
ERASE H1
CN198
ERS 1(X)
ERS 1(Y)
ERS 1(G)
DR126/DR90
ER1
T1
TP1
TP2
RV1;ERASE CURRENT
CV1;ERASE FREQUENCY
ERASE2 AMP
IC2 HD-26B
MD65,193-2AB
ERASE H2
ERS 2(X)
ERS 2(Y)
ERS 2(G)
ER2
T2
TP3
TP4
RV2;ERASE CURRENT
CV2;ERASE FREQUENCY
E1
+5V
-5V
GND
1
2
3
4
5
A
B
C
D
E
F
G
H
I
J
K
L

Rec/Erase Head Amp

RE-70 BOARD

BOARD NO.1-634-498-11
HDV-10(J) ;#10001-
HDV-10(UC) ;#10001-
HDV-10(EK) ;#10001-

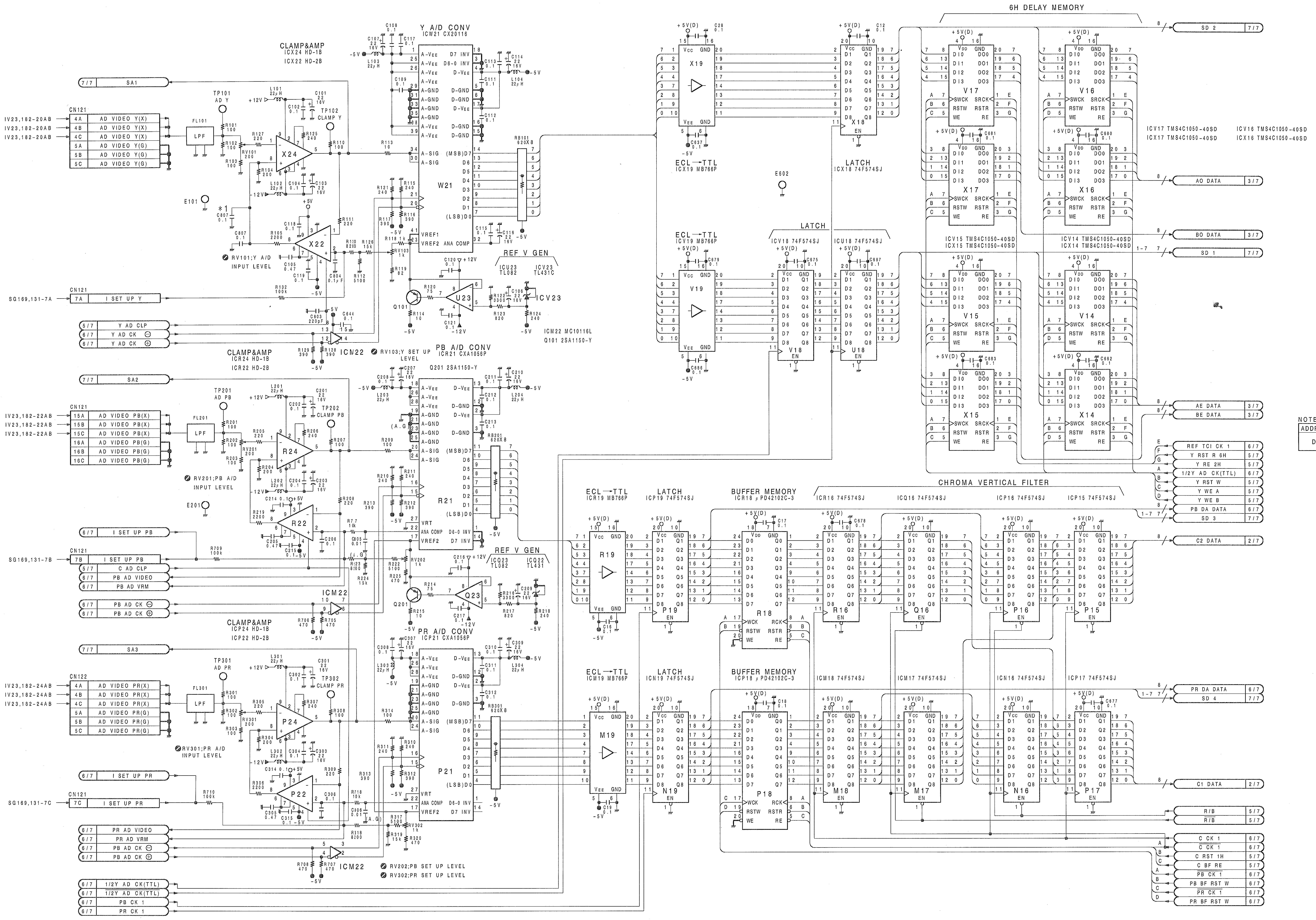
6H DELAY MEMORY
CLAMP&AMP
Y A/D CONV
ICW21 CX20116
W21
X24
X22
REF V GEN
U23
ICV23
Q101
ICM22
RV101;Y A/D INPUT LEVEL
RV103;Y SET UP LEVEL
PB A/D CONV
ICR21 CXA1056P
R21
R24
R22
Q23
Q201
RV201;PB A/D INPUT LEVEL
PR A/D CONV
ICP21 CXA1056P
P21
P24
P22
RV301;PR A/D INPUT LEVEL
RV202;PB SET UP LEVEL
RV302;PR SET UP LEVEL
ICM22 MC10116L
Q101 2SA1150-Y
Q201 2SA1150-Y
ECL→TTL
ICX19 MB766P
X19
LATCH
ICX18 74F574SJ
X18
ECL→TTL
ICY19 MB766P
Y19
ICY18 74F574SJ
ICU18 74F574SJ
V18
U18
ICV17 TMS4C1050-40SD
ICX17 TMS4C1050-40SD
ICV16 TMS4C1050-40SD
ICX16 TMS4C1050-40SD
ICV15 TMS4C1050-40SD
ICX15 TMS4C1050-40SD
ICV14 TMS4C1050-40SD
ICX14 TMS4C1050-40SD
V17
V16
X17
X16
V15
V14
X15
X14
E601
E602
ECL→TTL
ICR19 MB766P
R19
LATCH
ICP19 74F574SJ
P19
BUFFER MEMORY
ICR18 μPD42102C-3
R18
CHROMA VERTICAL FILTER
ICR16 74F574SJ
ICQ16 74F574SJ
ICP16 74F574SJ
ICP15 74F574SJ
R16
Q16
P16
P15
ECL→TTL
ICM19 MB766P
M19
LATCH
ICN19 74F574SJ
N19
BUFFER MEMORY
ICP18 μPD42102C-3
P18
ICM18 74F574SJ
ICM17 74F574SJ
ICN16 74F574SJ
ICP17 74F574SJ
M18
M17
N16
P17
CN121
CN122
IV23,182-20AB
IV23,182-22AB
IV23,182-24AB
SG169,131-7A
SG169,131-7B
SG169,131-7C
AD VIDEO Y(X)
AD VIDEO Y(G)
AD VIDEO PB(X)
AD VIDEO PB(G)
AD VIDEO PR(X)
AD VIDEO PR(G)
I SET UP Y
I SET UP PB
I SET UP PR
SA1
SA2
SA3
Y AD CLP
Y AD CK
C AD CLP
PB AD VIDEO
PB AD VRM
PB AD CK
PR AD VIDEO
PR AD VRM
1/2Y AD CK(TTL)
PB CK 1
PR CK 1
LPF
FL101
FL201
FL301
SD 2
AD DATA
BD DATA
SD 1
AE DATA
BE DATA
REF TCI CK 1
Y RST R 6H
Y RE 2H
1/2Y AD CK(TTL)
Y RST W
Y WE A
Y WE B
PB DA DATA
SD 3
C2 DATA
PR DA DATA
SD 4
C1 DATA
R/B
C CK 1
C RST 1H
C BF RE
PB CK 1
PB BF RST W
PR CK 1
PR BF RST W

NOTE:

ADDRESS	MARK	CHANGE INFORMATION	SERIAL NO.
D2	＊1	C807 0.1 DELETED	#10101-

Y,PB,PR ch A/D Converter

IPR-1 BOARD (1/7)

BOARD NO.1-634-491-11,12,13,14
HDV-10(J) ;#10001-
HDV-10(UC) ;#10001-
HDV-10(EK) ;#10001-

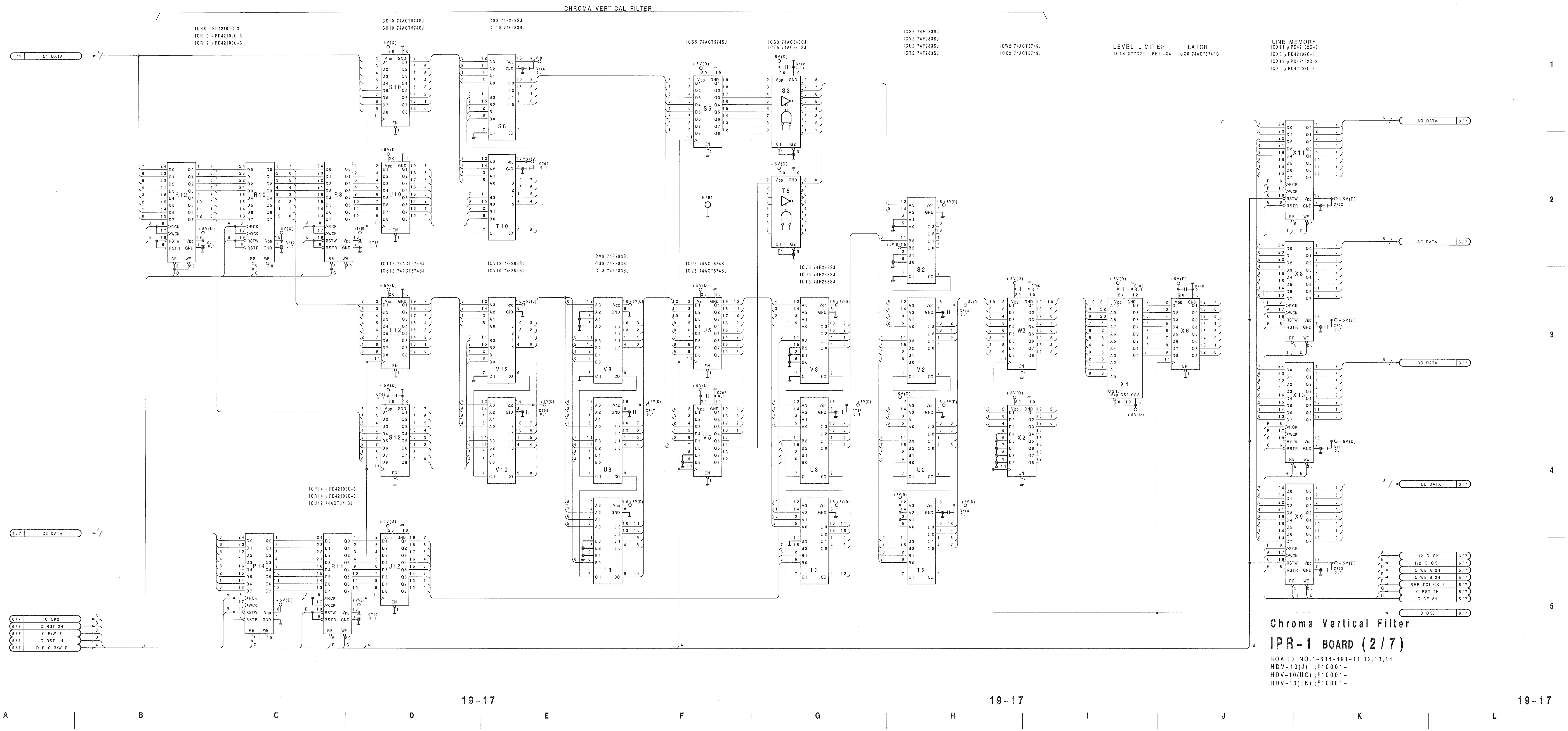
CHROMA VERTICAL FILTER
ICR8 μPD42102C-3
ICR10 μPD42102C-3
ICR12 μPD42102C-3
ICS10 74ACT574SJ
ICU10 74ACT574SJ
ICS8 74F283SJ
ICT10 74F283SJ
ICS5 74ACT574SJ
ICS3 74AC540SJ
ICT5 74AC540SJ
ICS2 74F283SJ
ICV2 74F283SJ
ICU2 74F283SJ
ICT2 74F283SJ
ICW2 74ACT574SJ
ICX2 74ACT574SJ
LEVEL LIMITER
ICX4 CY7C291-IPR1-X4
LATCH
ICX6 74ACT574PC
LINE MEMORY
ICX11 μPD42102C-3
ICX8 μPD42102C-3
ICX13 μPD42102C-3
ICX9 μPD42102C-3
ICT12 74ACT574SJ
ICS12 74ACT574SJ
ICV12 74F283SJ
ICV10 74F283SJ
ICV8 74F283SJ
ICU8 74F283SJ
ICT8 74F283SJ
ICU5 74ACT574SJ
ICV5 74ACT574SJ
ICV3 74F283SJ
ICU3 74F283SJ
ICT3 74F283SJ
ICP14 μPD42102C-3
ICR14 μPD42102C-3
ICU12 74ACT574SJ
1/7 C1 DATA
1/7 C2 DATA
6/7 C CK2
5/7 C RST 2H
5/7 C R/W E
5/7 C RST 1H
5/7 DLD C R/W E
AO DATA 3/7
AE DATA 3/7
BO DATA 3/7
BE DATA 3/7
1/2 C CK 6/7
1/2 C CK 6/7
C WE A 2H 5/7
C WE B 2H 5/7
REF TCI CK 2 6/7
C RST 4H 5/7
C RE 2H 5/7
C CK3 6/7
R12
R10
R8
S10
S8
T10
U10
S5
S3
T5
E701
S2
T12
V12
V8
U5
V3
V2
W2
X4
X6
S12
V10
U8
V5
U3
U2
X2
T8
T3
T2
P14
R14
U12
X11
X8
X13
X9
+5V(D)
1
2
3
4
5
A
B
C
D
E
F
G
H
I
J
K
L

Chroma Vertical Filter

IPR-1 BOARD (2/7)

BOARD NO.1-634-491-11,12,13,14
HDV-10(J) ;#10001-
HDV-10(UC) ;#10001-
HDV-10(EK) ;#10001-

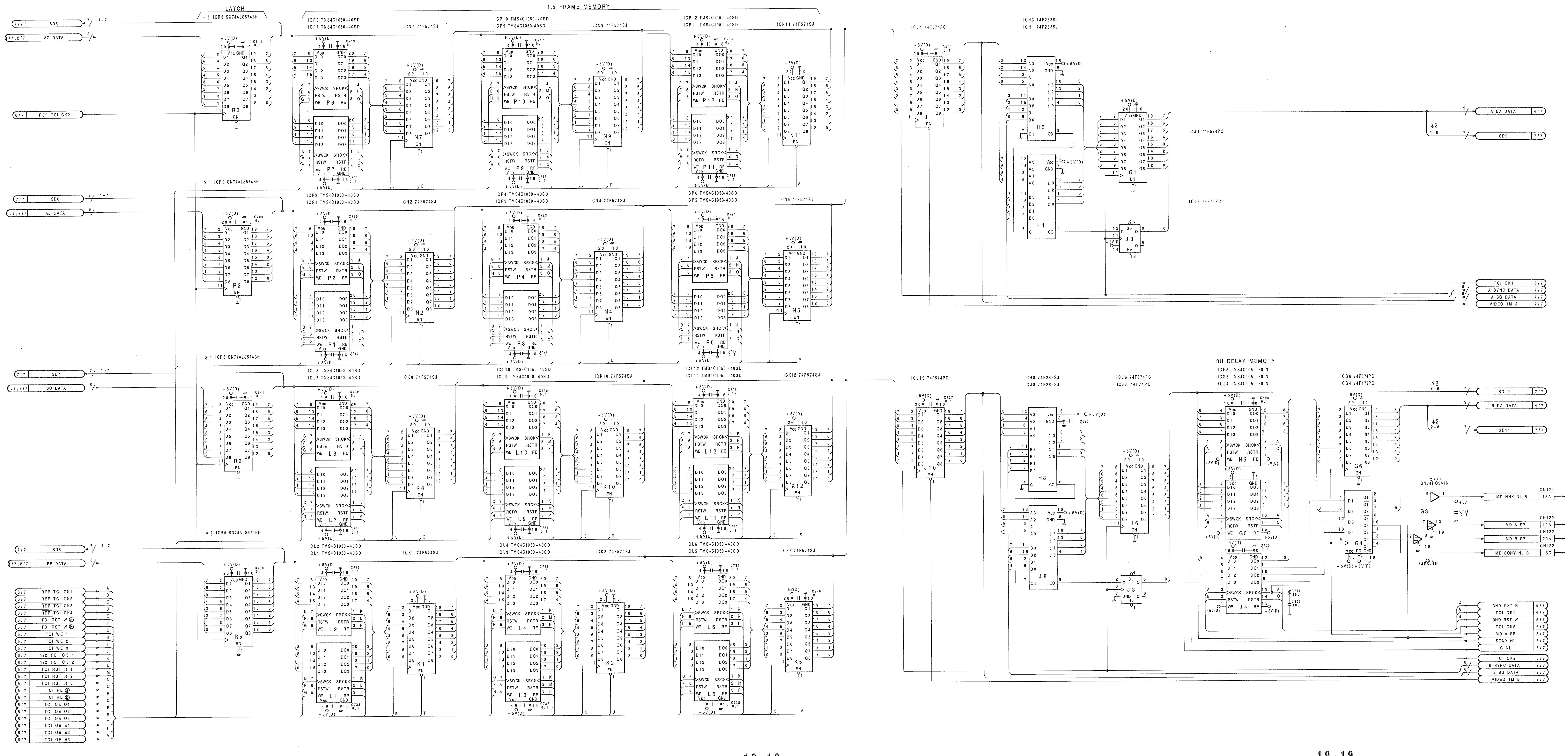
LATCH
1.5 FRAME MEMORY
3H DELAY MEMORY
SD5
AD DATA
REF TCI CK2
SD6
AE DATA
SD7
BD DATA
SD8
BE DATA
A DA DATA
SD9
TCI CK1
A SYNC DATA
A SG DATA
VIDEO 1M A
SD10
B DA DATA
SD11
MD NHK NL B
MD A SP
MD B SP
MD SONY NL B
3HD RST R
3HD RST W
TCI CK2
MD A SP
SONY NL
C NL
B SYNC DATA
B SG DATA
VIDEO 1M B
CN122

NOTE:

ADDRES	MARK	CHANGE INFORMATION	SERIAL NO.
E1 E2 E3 E4	*1	ICR2,3,5,6 CHANGED SN74ALS574AN → SN74ALS574BN	#10401-
M1 M3	*2	SD9,SD10,SD11 CHANGED 1-7 → 2-8	#10901-

1.5 Frame Memory & 3H Delay Memory

IPR-1 BOARD (3/7)

BOARD NO.1-634-491-11,12,13,14
HDV-10(J) ;#10001-
HDV-10(UC) ;#10001-
HDV-10(EK) ;#10001-

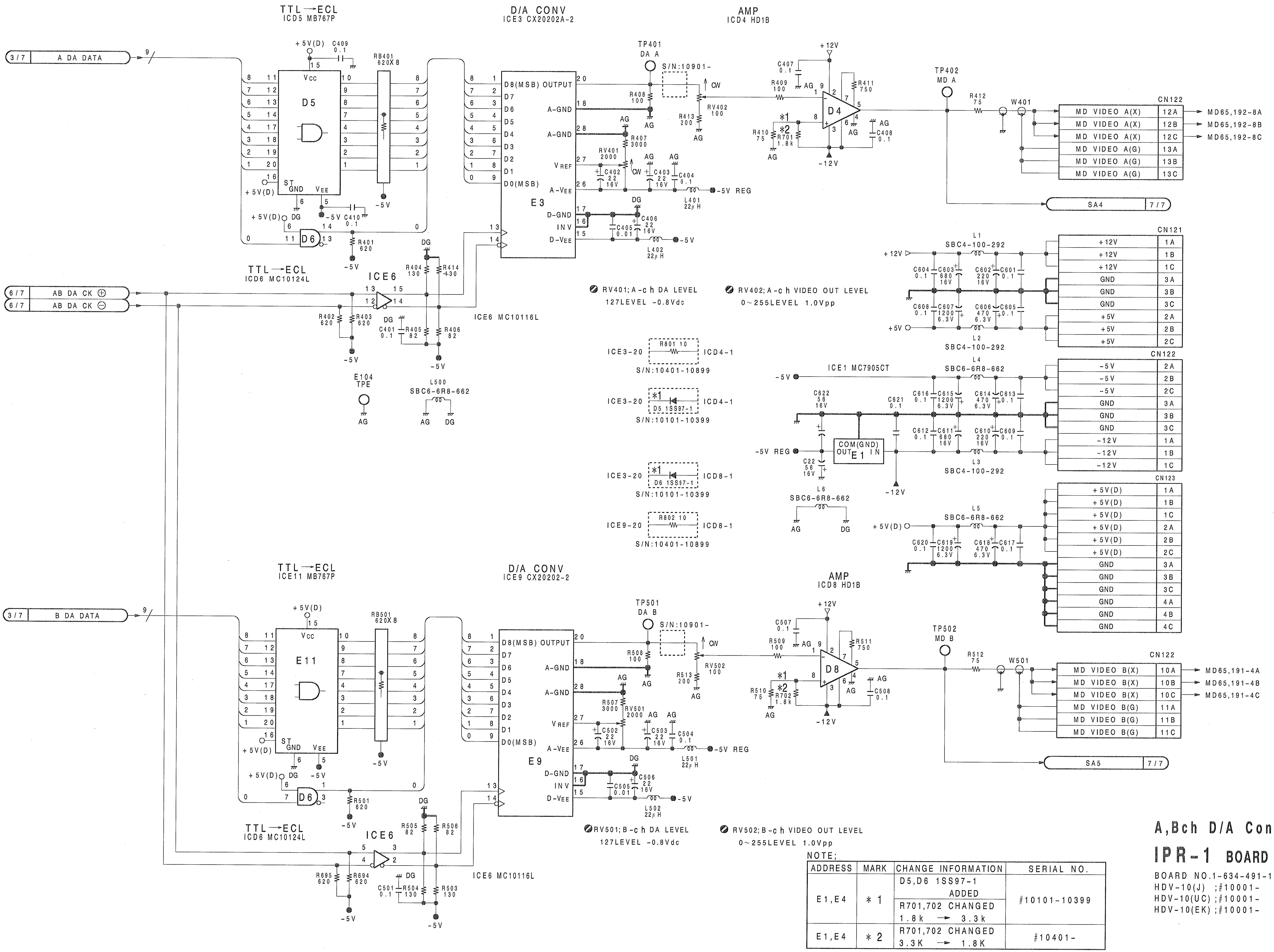
TTL→ECL
ICD5 MB767P
D/A CONV
ICE3 CX20202A-2
AMP
ICD4 HD1B
3/7 A DA DATA
D5
E3
D4
TP401 DA A
S/N:10901-
TP402 MD A
W401
CN122
MD VIDEO A(X) 12A
MD VIDEO A(X) 12B
MD VIDEO A(X) 12C
MD VIDEO A(G) 13A
MD VIDEO A(G) 13B
MD VIDEO A(G) 13C
MD65,192-8A
MD65,192-8B
MD65,192-8C
SA4 7/7
TTL→ECL
ICD6 MC10124L
ICE6
ICE6 MC10116L
6/7 AB DA CK ⊕
6/7 AB DA CK ⊖
E104 TPE
L500 SBC6-6R8-662
CN121
+12V 1A
+12V 1B
+12V 1C
GND 3A
GND 3B
GND 3C
+5V 2A
+5V 2B
+5V 2C
L1 SBC4-100-292
L2 SBC4-100-292
ICE1 MC7905CT
L4 SBC6-6R8-662
L3 SBC4-100-292
CN122
-5V 2A
-5V 2B
-5V 2C
GND 3A
GND 3B
GND 3C
-12V 1A
-12V 1B
-12V 1C
COM(GND) OUT E1 IN
-5V REG
L6 SBC6-6R8-662
L5 SBC6-6R8-662
CN123
+5V(D) 1A
+5V(D) 1B
+5V(D) 1C
+5V(D) 2A
+5V(D) 2B
+5V(D) 2C
GND 3A
GND 3B
GND 3C
GND 4A
GND 4B
GND 4C
ICE3-20 R801 10 ICD4-1 S/N:10401-10899
ICE3-20 *1 D5 1SS97-1 ICD4-1 S/N:10101-10399
ICE3-20 *1 D6 1SS97-1 ICD8-1 S/N:10101-10399
ICE9-20 R802 10 ICD8-1 S/N:10401-10899
TTL→ECL
ICE11 MB767P
D/A CONV
ICE9 CX20202-2
AMP
ICD8 HD1B
3/7 B DA DATA
E11
E9
D8
TP501 DA B
TP502 MD B
W501
CN122
MD VIDEO B(X) 10A
MD VIDEO B(X) 10B
MD VIDEO B(X) 10C
MD VIDEO B(G) 11A
MD VIDEO B(G) 11B
MD VIDEO B(G) 11C
MD65,191-4A
MD65,191-4B
MD65,191-4C
SA5 7/7
TTL→ECL
ICD6 MC10124L
ICE6
ICE6 MC10116L

RV401; A-ch DA LEVEL
127LEVEL -0.8Vdc

RV402; A-ch VIDEO OUT LEVEL
0~255LEVEL 1.0Vpp

RV501; B-ch DA LEVEL
127LEVEL -0.8Vdc

RV502; B-ch VIDEO OUT LEVEL
0~255LEVEL 1.0Vpp

NOTE;

ADDRESS	MARK	CHANGE INFORMATION	SERIAL NO.
E1,E4	*1	D5,D6 1SS97-1 ADDED R701,702 CHANGED 1.8k → 3.3k	#10101-10399
E1,E4	*2	R701,702 CHANGED 3.3K → 1.8K	#10401-

A,Bch D/A Converter

IPR-1 BOARD (4/7)

BOARD NO.1-634-491-11,12,13,14
HDV-10(J) ;#10001-
HDV-10(UC) ;#10001-
HDV-10(EK) ;#10001-

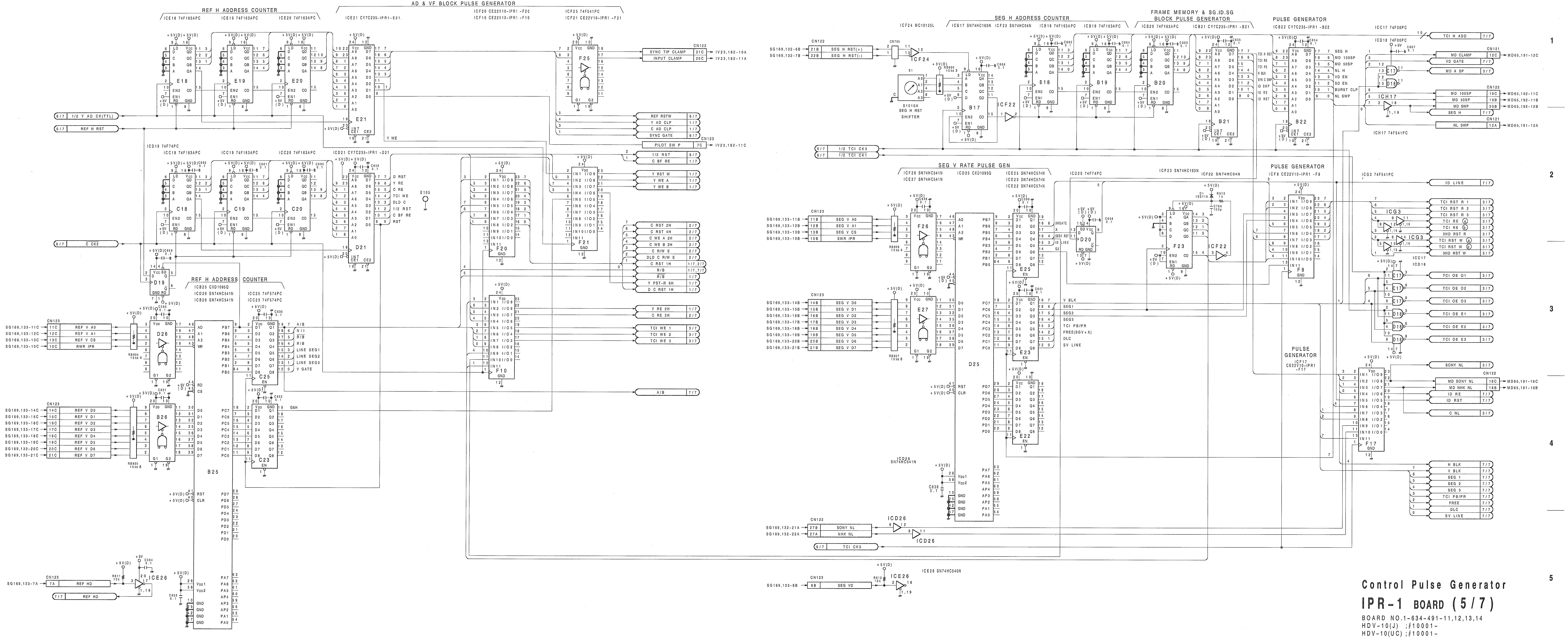
REF H ADDRESS COUNTER
ICE18 74F163APC
ICE19 74F163APC
ICE20 74F163APC
AD & VF BLOCK PULSE GENERATOR
ICE21 CY7C235-IPR1-E21.
ICF20 CE22V10-IPR1 -F20
ICF10 CE22V10-IPR1 -F10
ICF25 74F541PC
ICF21 CE22V10-IPR1 -F21
ICD19 74F74PC
ICC18 74F163APC
ICC19 74F163APC
ICC20 74F163APC
ICD21 CY7C235-IPR1-D21
REF H ADDRESS COUNTER
ICB25 CXD1095Q
ICB26 SN74HC541N
ICD26 SN74HC541N
ICC25 74F574PC
ICC23 74F574PC
ICE26 SN74HC540N
SYNC TIP CLAMP
INPUT CLAMP
REF RSTW
Y AD CLP
C AD CLP
SYNC GATE
PILOT SW P
1/2 Y AD CK(TTL)
REF H RST
C CK2
1/2 RST
C BF RE
Y RST W
Y WE A
Y WE B
C RST 2H
C RST 4H
C WE A 2H
C WE B 2H
C R/W E
DLO C R/W E
C RST 1H
R/B
Y PST-R 6H
D C RST 1H
Y RE 2H
C RE 2H
TCI WE 1
TCI WE 2
TCI WE 3
A/B
REF V A0
REF V A1
REF V CS
RWR IPR
REF V D0
REF V D1
REF V D2
REF V D3
REF V D4
REF V D5
REF V D6
REF V D7
REF HD
CN123
CN122
IV23,182-10A
IV23,182-11A
IV23,182-11C
SG169,133-11C
SG169,133-12C
SG169,133-13C
SG169,133-10C
SG169,133-14C
SG169,133-15C
SG169,133-16C
SG169,133-17C
SG169,133-18C
SG169,133-19C
SG169,133-20C
SG169,133-21C
SG169,133-7A
E105
SEG H ADDRESS COUNTER
ICF24 MC10125L
ICB17 SN74HC163N
ICF22 SN74HC04N
ICB18 74F163APC
ICB19 74F163APC
FRAME MEMORY & SG.ID.SG
BLOCK PULSE GENERATOR
ICB20 74F163APC
ICB21 CY7C235-IPR1 -B21
PULSE GENERATOR
ICB22 CY7C235-IPR1 -B22
ICC17 74F00PC
ICD18 74F00PC
ICH17 74F541PC
SEG H RST(+)
SEG H RST(-)
SG169,132-6B
SG169,132-7B
S1010A
SEG H RST
SHIFTER
TCI H ADD
MD CLAMP
VD GATE
MD A SP
MD 100SP
MD 50SP
MD SWP
SEG H
NL SWP
MD65,191-12C
MD65,192-11C
MD65,192-11B
MD65,192-12B
MD65,191-12A
1/2 TCI CK3
1/2 TCI CK1
SEG V RATE PULSE GEN
ICF26 SN74HC541N
ICE27 SN74HC541N
ICD25 CXD1095Q
ICE25 SN74HC574N
ICE23 SN74HC574N
ICE22 SN74HC574N
ICD20 74F74PC
ICF23 SN74HC163N
ICF22 SN74HC04N
PULSE GENERATOR
ICF8 CE22V10-IPR1 -F8
ICG3 74F541PC
ID LINE
TCI RST R 1
TCI RST R 2
TCI RST R 3
TCI RE 1
TCI RE 2
TCI RE 3
3HD RST R
TCI RST W
3HD RST W
ICC17
ICD18
TCI OE D1
TCI OE D2
TCI OE D3
TCI OE E1
TCI OE E2
TCI OE E3
SEG V A0
SEG V A1
SEG V CS
SWR IPR
SEG V D0
SEG V D1
SEG V D2
SEG V D3
SEG V D4
SEG V D5
SEG V D6
SEG V D7
SG169,133-11B
SG169,133-12B
SG169,133-13B
SG169,133-10B
SG169,133-14B
SG169,133-15B
SG169,133-16B
SG169,133-17B
SG169,133-18B
SG169,133-19B
SG169,133-20B
SG169,133-21B
V BLK
SEG1
SEG2
SEG3
TCI PB/PR
FREE(SGV+X)
DLC
SV LINE
PULSE GENERATOR
ICF17 CE22V10-IPR1 -F17
SONY NL
MD SONY NL
MD NHK NL
ID RE
ID RST
C NL
MD65,191-16C
MD65,191-16B
H BLK
V BLK
SEG 1
SEG 2
SEG 3
TCI PB/PR
FREE
DLC
SV LINE
SONY NL
NHK NL
SG169,132-21A
SG169,132-22A
TCI CK3
ICD26
SEG VD
SG169,133-8B
ICE26 SN74HC540N
ICE26
D25
B25
1
2
3
4
5

Control Pulse Generator

IPR-1 BOARD (5/7)

BOARD NO.1-634-491-11,12,13,14
HDV-10(J) ;#10001-
HDV-10(UC) ;#10001-
HDV-10(EK) ;#10001-

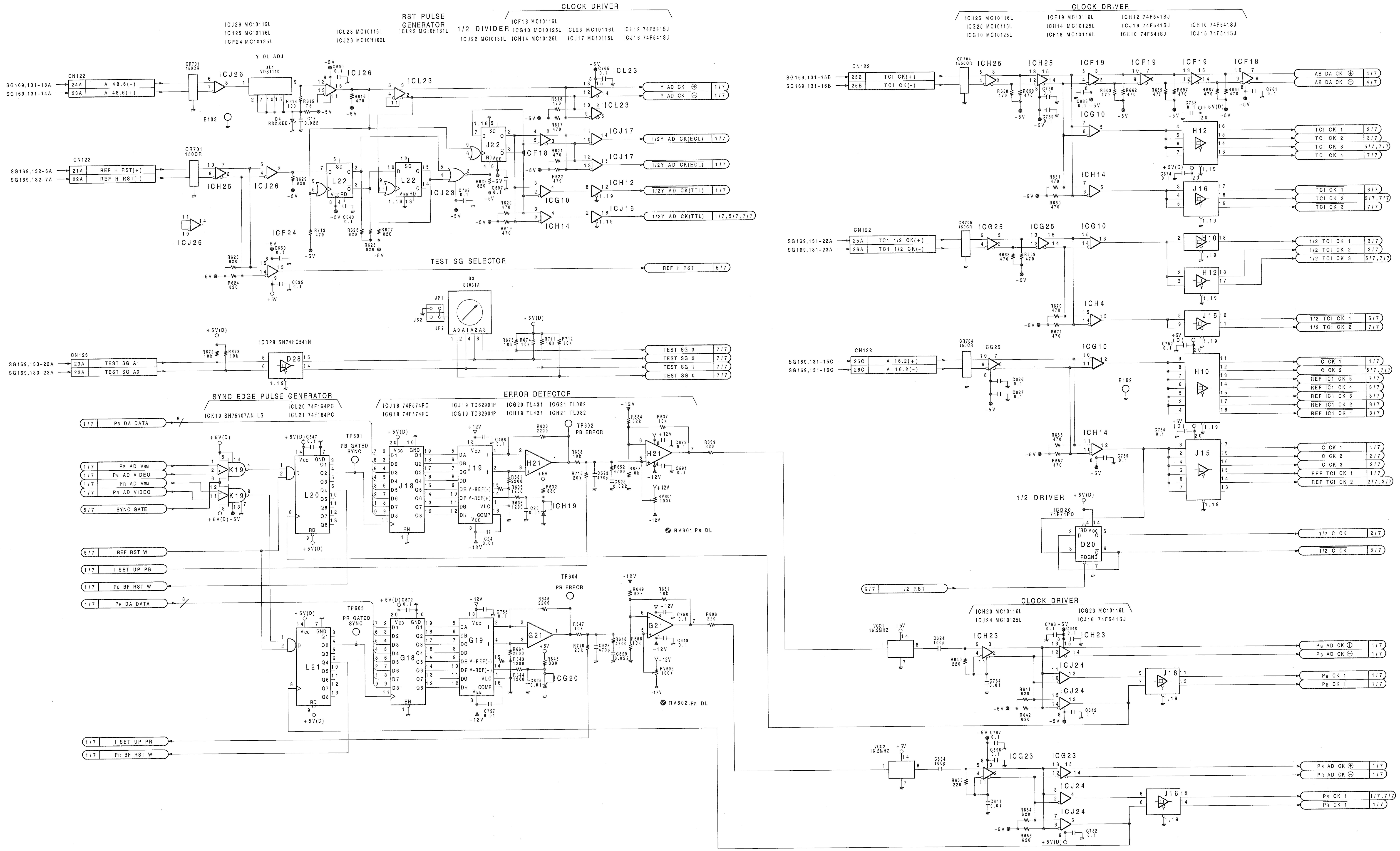
CLOCK DRIVER
RST PULSE GENERATOR
1/2 DIVIDER
Y DL ADJ
ICJ26 MC10115L
ICJ25 MC10116L
ICF24 MC10125L
ICL23 MC10116L
ICJ23 MC10H102L
ICL22 MC10H131L
ICJ22 MC10131L
ICF18 MC10116L
ICG10 MC10125L
ICH14 MC10125L
ICL23 MC10116L
ICJ17 MC10115L
ICH12 74F541SJ
ICJ16 74F541SJ
CN122
SG169,131-13A
SG169,131-14A
A 48.6(-)
A 48.6(+)
Y AD CK ⊕
Y AD CK ⊖
SG169,132-6A
SG169,132-7A
REF H RST(+)
REF H RST(-)
1/2Y AD CK(ECL)
1/2Y AD CK(TTL)
REF H RST
TEST SG SELECTOR
S3
S1031A
ICD28 SN74HC541N
CN123
SG169,133-22A
SG169,133-23A
TEST SG A1
TEST SG A0
TEST SG 3
TEST SG 2
TEST SG 1
TEST SG 0
SYNC EDGE PULSE GENERATOR
ICK19 SN75107AN-LS
ICL20 74F164PC
ICL21 74F164PC
ERROR DETECTOR
ICJ18 74F574PC
ICG18 74F574PC
ICJ19 TD62901P
ICG19 TD62901P
ICG20 TL431
ICH19 TL431
ICG21 TL082
ICH21 TL082
PB DA DATA
PB AD VRM
PB AD VIDEO
PR AD VRM
PR AD VIDEO
SYNC GATE
TP601
PB GATED SYNC
TP602
PB ERROR
RV601;PB DL
REF RST W
I SET UP PB
PB BF RST W
PR DA DATA
TP603
PR GATED SYNC
TP604
PR ERROR
RV602;PR DL
I SET UP PR
PR BF RST W
ICH25 MC10116L
ICG25 MC10116L
ICG10 MC10125L
ICF19 MC10116L
ICH14 MC10125L
ICF18 MC10116L
ICH12 74F541SJ
ICJ16 74F541SJ
ICH10 74F541SJ
ICJ15 74F541SJ
SG169,131-15B
SG169,131-16B
TCI CK(+)
TCI CK(-)
AB DA CK ⊕
AB DA CK ⊖
TCI CK 1
TCI CK 2
TCI CK 3
TCI CK 4
SG169,131-22A
SG169,131-23A
TCI 1/2 CK(+)
TCI 1/2 CK(-)
1/2 TCI CK 1
1/2 TCI CK 2
1/2 TCI CK 3
SG169,131-15C
SG169,131-16C
A 16.2(+)
A 16.2(-)
C CK 1
C CK 2
REF IC1 CK 5
REF IC1 CK 4
REF IC1 CK 3
REF IC1 CK 2
REF IC1 CK 1
C CK 3
REF TCI CK 1
REF TCI CK 2
1/2 DRIVER
ICD20 74F74PC
1/2 C CK
1/2 RST
ICH23 MC10116L
ICJ24 MC10125L
ICG23 MC10116L
ICJ16 74F541SJ
VCO1 16.2MHz
PB AD CK ⊕
PB AD CK ⊖
PB CK 1
VCO2 16.2MHz
PR AD CK ⊕
PR AD CK ⊖
PR CK 1
E102
E103

Clock Generator & Chroma PLL

IPR-1 BOARD (6/7)

BOARD NO.1-634-491-11,12,13,14
HDV-10(J) ;#10001-
HDV-10(UC) ;#10001-
HDV-10(EK) ;#10001-

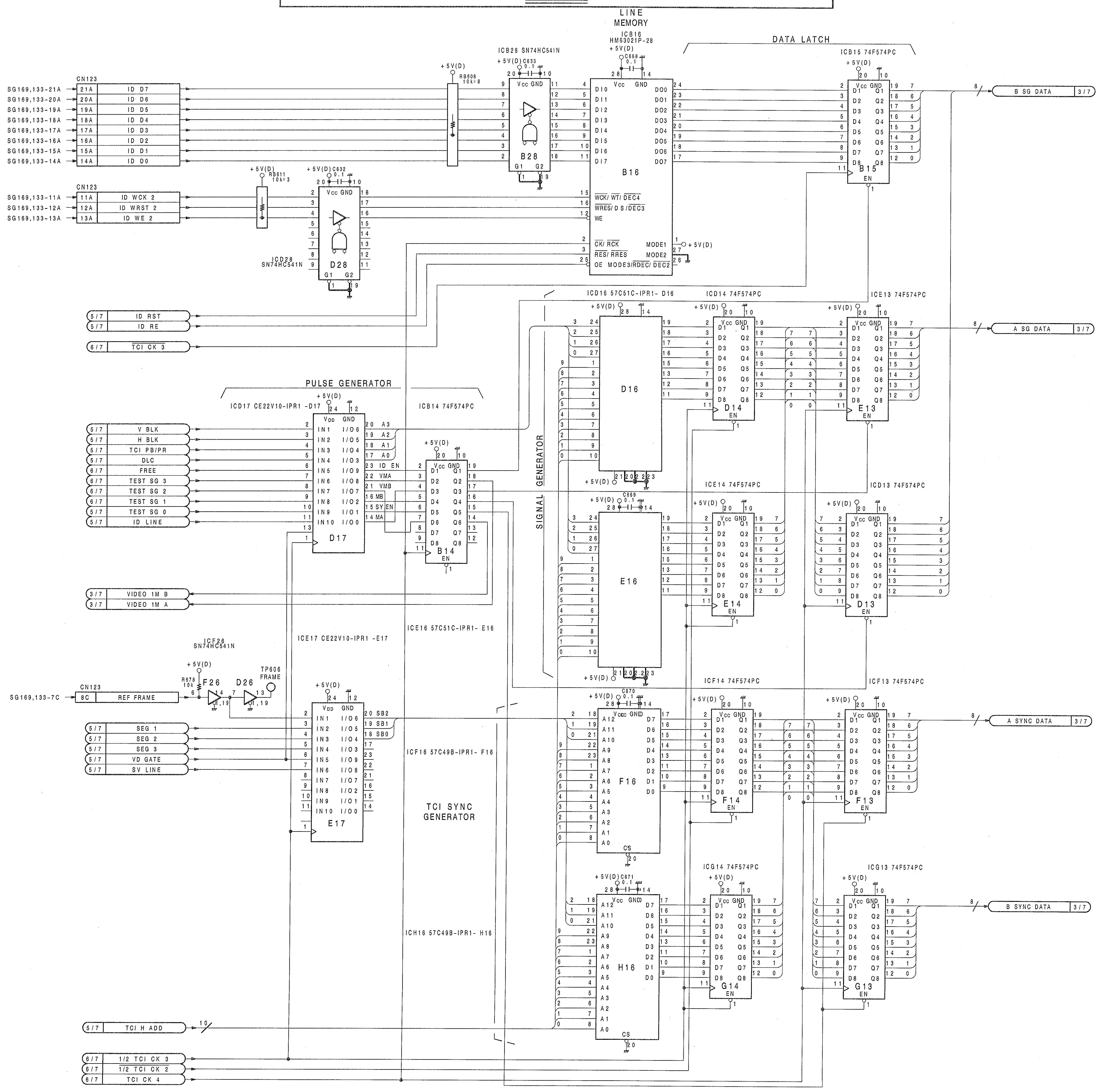
LINE MEMORY
DATA LATCH
PULSE GENERATOR
SIGNAL GENERATOR
TCI SYNC GENERATOR
B SG DATA
A SG DATA
A SYNC DATA
B SYNC DATA
B16
D16
E16
F16
H16
D17
E17

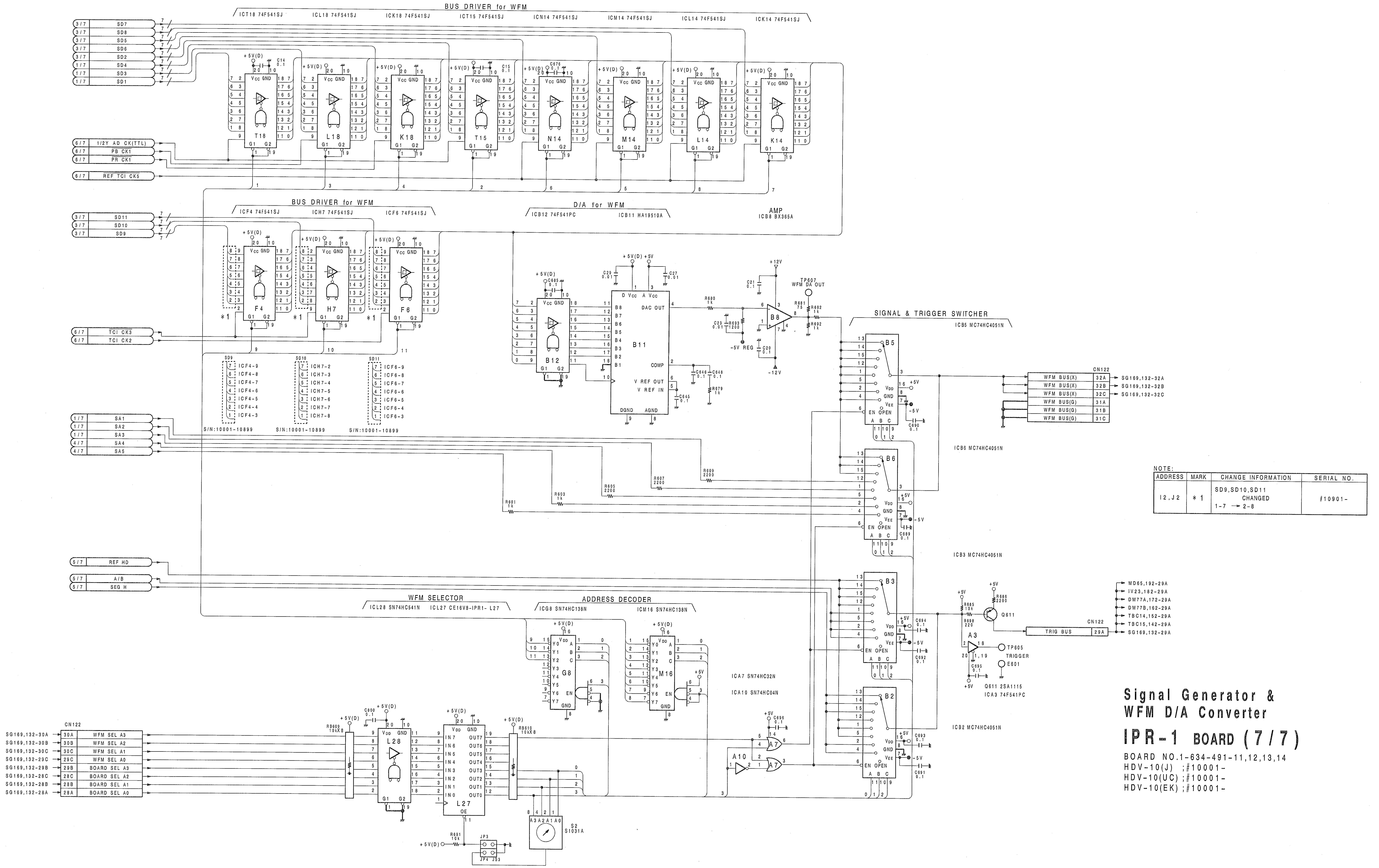
BUS DRIVER for WFM
D/A for WFM
AMP
SIGNAL & TRIGGER SWITCHER
WFM SELECTOR
ADDRESS DECODER
TRIG BUS
CN122
MD65,192-29A
IV23,182-29A
DM77A,172-29A
DM77B,162-29A
TBC14,152-29A
TBC15,142-29A
SG169,132-29A

NOTE:

ADDRESS	MARK	CHANGE INFORMATION	SERIAL NO.
I2,J2	* 1	SD9,SD10,SD11 CHANGED 1-7 → 2-8	#10901-

Signal Generator & WFM D/A Converter

IPR-1 BOARD (7/7)

BOARD NO.1-634-491-11,12,13,14
HDV-10(J) ;#10001-
HDV-10(UC) ;#10001-
HDV-10(EK) ;#10001-

SYNC EDGE DETECTOR
H SYNC DETECTOR/SYNC FALL DETECTOR
V SYNC DETECTOR
CBH,SYNC SEP TIMING GEN
PRESCALER
TIMING GENERATOR
PHASE DETECT INHIBIT
ECL→TTL
OSC SYNC/PHASE DET PULSE GENERATOR
TCI POINTER CONTROL
WCK VIDEO PHASE ADJUST
WCK OSC
WCK AFC CONTROL
VELO ERROR DETECTOR
ACH A/D CONVERTER
AMP
LPF
A/D CONV
D/A CONV FOR CHECK
DATA DRIVER
0/127/255 LEVEL HOLD
255 LEVEL REJECT
SAMPLE PULSE SELECTOR
CLOCK DRIVER
BUFFER
TCI POINTER
TIMING GEN
ASP CONTROL
WCK AFC,WR Z TIMING GEN
NON LINEAR TIMING GEN
A
B
C
D
E
F
G
H
I
J
K
L
M
N
O
1
2
3
4
5

Ach Video A/D Converter, Write Clock Generator

TBC-14 BOARD (1/3)

BOARD NO.1-634-494-11
HDV-10(J) ;#10001-
HDV-10(UC) ;#10001-
HDV-10(EK) ;#10001-

SYNC EDGE DETECTOR
H SYNC DETECTOR/SYNC FALL DETECTOR
V SYNC DETECTOR
PRESCALER
CBH,SYNC SEP TIMING GEN
PHASE DETECT INHIBIT
ECL→TTL
TIMING GENERATOR
OSC,SYNC PHASE DET PULSE GENERATOR
WCK VIDEO PHASE ADJUST
WCK OSC
TCI POINTER CONTROL
WCK AFC CONTROL
VELO ERROR DETECTOR
TCI POINTER
WCK AFC,WR Z TIMING GEN
NON LINEAR TIMING GEN
BSP CONTROL
BCH A/D CONVERTER
AMP
0/127/255 LEVEL HOLD
SAMPLE PULSE SELECTOR
A/D CONV
255 LEVEL
DATA DRIVER
CLOCK DRIVER
BUFFER
127/255 TRIMER
TIMING GENERATOR
CN152
CN153
CN151
DM SONY NL B
DM NHK NL B
NHK NL
SONY NL
DM77B,162-12A,13A
DM77B,162-10A,11A
TBC15,142-10B
A
B
C
D
E
F
G
H
I
J
K
L
M
N
O
1
2
3
4
5

Bch Video A/D Converter, Write Clock Generator

TBC-14 BOARD (2/3)

BOARD NO.1-634-494-11
HDV-10(J) ;#10001-
HDV-10(UC) ;#10001-
HDV-10(EK) ;#10001-

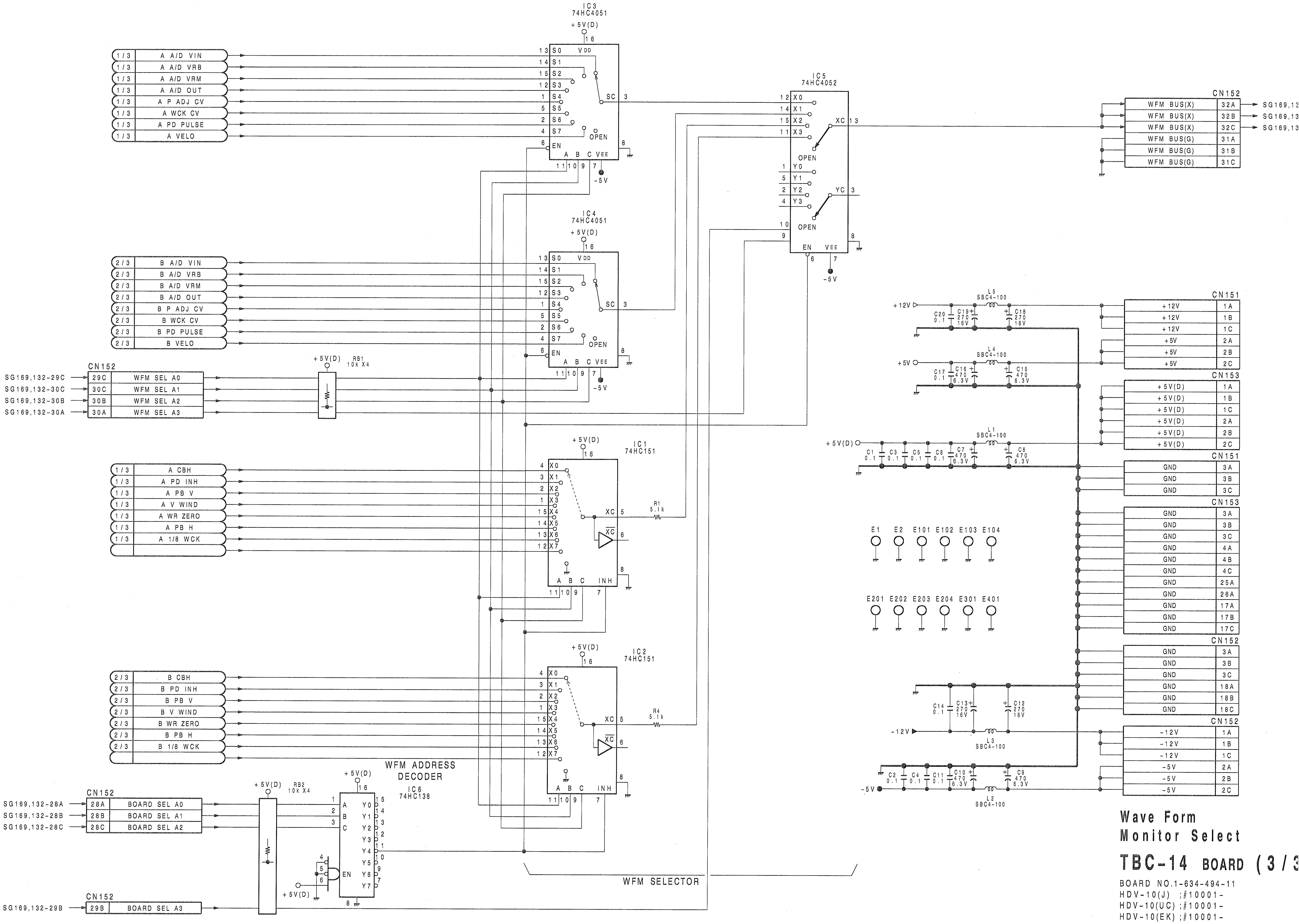
IC3
74HC4051
+5V(D)
1/3 A A/D VIN
1/3 A A/D VRB
1/3 A A/D VRM
1/3 A A/D OUT
1/3 A P ADJ CV
1/3 A WCK CV
1/3 A PD PULSE
1/3 A VELO
S0
S1
S2
S3
S4
S5
S6
S7
EN
VDD
SC
OPEN
A B C VEE
-5V
IC4
74HC4051
2/3 B A/D VIN
2/3 B A/D VRB
2/3 B A/D VRM
2/3 B A/D OUT
2/3 B P ADJ CV
2/3 B WCK CV
2/3 B PD PULSE
2/3 B VELO
IC5
74HC4052
X0
X1
X2
X3
XC
Y0
Y1
Y2
Y3
YC
EN
VEE
CN152
WFM BUS(X) 32A
WFM BUS(X) 32B
WFM BUS(X) 32C
WFM BUS(G) 31A
WFM BUS(G) 31B
WFM BUS(G) 31C
SG169,13
SG169,13
SG169,13
SG169,132-29C 29C WFM SEL A0
SG169,132-30C 30C WFM SEL A1
SG169,132-30B 30B WFM SEL A2
SG169,132-30A 30A WFM SEL A3
+5V(D)
RB1
10k X4
IC1
74HC151
1/3 A CBH
1/3 A PD INH
1/3 A PB V
1/3 A V WIND
1/3 A WR ZERO
1/3 A PB H
1/3 A 1/8 WCK
X0
X1
X2
X3
X4
X5
X6
X7
XC
INH
R1
5.1k
IC2
74HC151
2/3 B CBH
2/3 B PD INH
2/3 B PB V
2/3 B V WIND
2/3 B WR ZERO
2/3 B PB H
2/3 B 1/8 WCK
R4
5.1k
WFM ADDRESS
DECODER
IC6
74HC138
SG169,132-28A 28A BOARD SEL A0
SG169,132-28B 28B BOARD SEL A1
SG169,132-28C 28C BOARD SEL A2
SG169,132-29B 29B BOARD SEL A3
RB2
10k X4
A
B
C
EN
Y0
Y1
Y2
Y3
Y4
Y5
Y6
Y7
WFM SELECTOR
+12V
L5
SBC4-100
C20
0.1
C19
270
16V
C18
270
16V
+5V
L4
SBC4-100
C17
0.1
C16
470
6.3V
C15
470
6.3V
+5V(D)
L1
SBC4-100
C1
0.1
C3
0.1
C5
0.1
C8
0.1
C7
470
6.3V
C6
470
6.3V
CN151
+12V 1A
+12V 1B
+12V 1C
+5V 2A
+5V 2B
+5V 2C
CN153
+5V(D) 1A
+5V(D) 1B
+5V(D) 1C
+5V(D) 2A
+5V(D) 2B
+5V(D) 2C
CN151
GND 3A
GND 3B
GND 3C
CN153
GND 3A
GND 3B
GND 3C
GND 4A
GND 4B
GND 4C
GND 25A
GND 26A
GND 17A
GND 17B
GND 17C
CN152
GND 3A
GND 3B
GND 3C
GND 18A
GND 18B
GND 18C
CN152
-12V 1A
-12V 1B
-12V 1C
-5V 2A
-5V 2B
-5V 2C
E1
E2
E101
E102
E103
E104
E201
E202
E203
E204
E301
E401
C14
0.1
C13
270
16V
C12
270
16V
-12V
L3
SBC4-100
C2
0.1
C4
0.1
C11
0.1
C10
470
6.3V
C9
470
6.3V
-5V
L2
SBC4-100

Wave Form
Monitor Select

TBC-14 BOARD (3/3

BOARD NO.1-634-494-11
HDV-10(J) ;#10001-
HDV-10(UC) ;#10001-
HDV-10(EK) ;#10001-

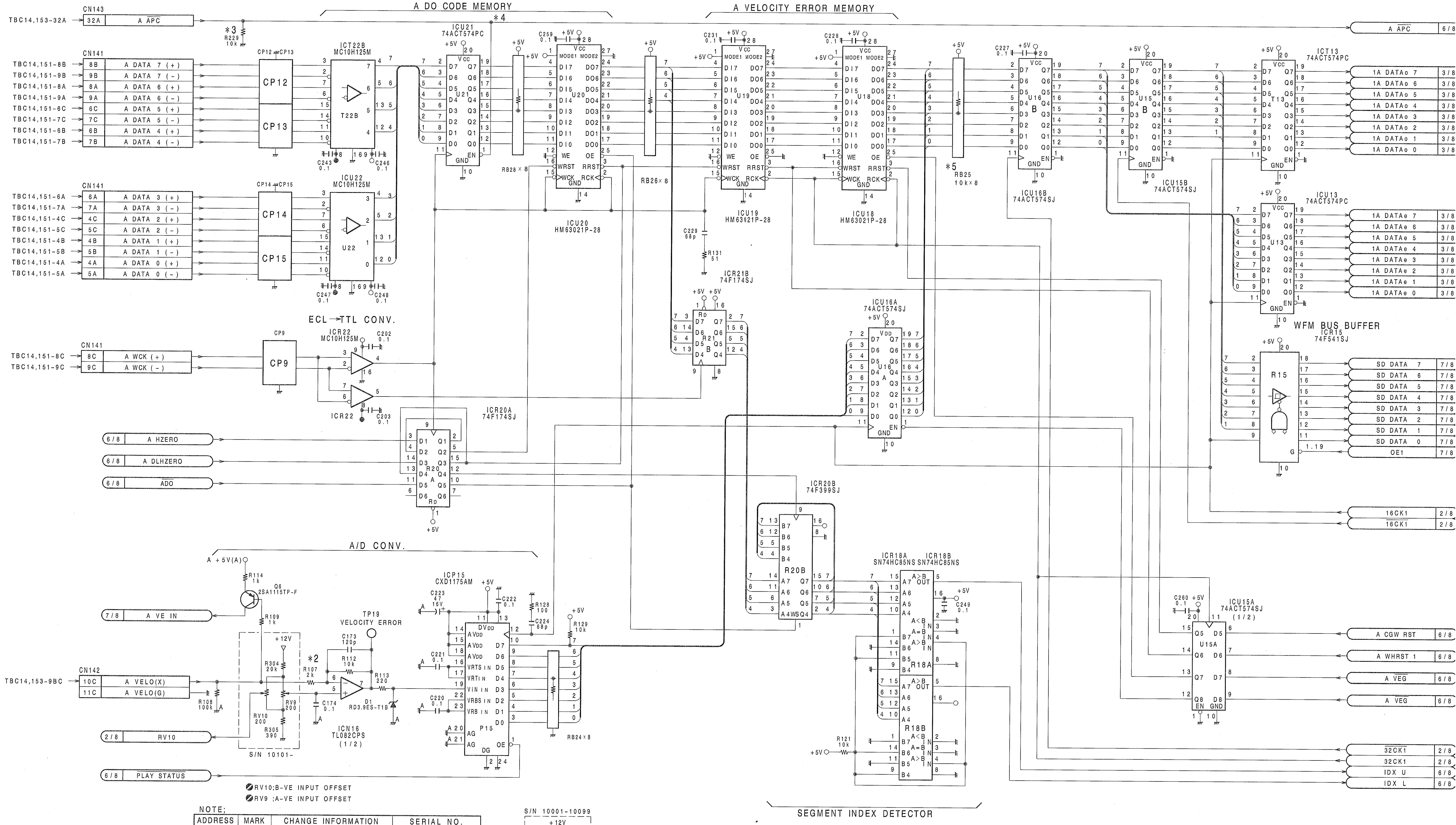
A DO CODE MEMORY
A VELOCITY ERROR MEMORY
*4
*3
R229 10k
CN143
TBC14,153-32A
32A A APC
CN141
TBC14,151-8B 8B A DATA 7 (+)
TBC14,151-9B 9B A DATA 7 (-)
TBC14,151-8A 8A A DATA 6 (+)
TBC14,151-9A 9A A DATA 6 (-)
TBC14,151-6C 6C A DATA 5 (+)
TBC14,151-7C 7C A DATA 5 (-)
TBC14,151-6B 6B A DATA 4 (+)
TBC14,151-7B 7B A DATA 4 (-)
TBC14,151-6A 6A A DATA 3 (+)
TBC14,151-7A 7A A DATA 3 (-)
TBC14,151-4C 4C A DATA 2 (+)
TBC14,151-5C 5C A DATA 2 (-)
TBC14,151-4B 4B A DATA 1 (+)
TBC14,151-5B 5B A DATA 1 (-)
TBC14,151-4A 4A A DATA 0 (+)
TBC14,151-5A 5A A DATA 0 (-)
TBC14,151-8C 8C A WCK (+)
TBC14,151-9C 9C A WCK (-)
CP12~CP13
CP14~CP15
CP12
CP13
CP14
CP15
CP9
ICT22B MC10H125M
ICU22 MC10H125M
ECL→TTL CONV.
ICR22 MC10H125M
ICU21 74ACT574PC
ICU20 HM63021P-28
ICU19 HM63021P-28
ICU18 HM63021P-28
RB28×8
RB26×8
*5
RB25 10k×8
ICU16B 74ACT574SJ
ICU15B 74ACT574SJ
ICT13 74ACT574PC
ICU13 74ACT574PC
ICR21B 74F174SJ
ICU16A 74ACT574SJ
ICR20A 74F174SJ
ICR20B 74F399SJ
ICR18A SN74HC85NS
ICR18B SN74HC85NS
ICR15 74F541SJ
WFM BUS BUFFER
ICU15A 74ACT574SJ (1/2)
1A DATAo 7 3/8
1A DATAo 6 3/8
1A DATAo 5 3/8
1A DATAo 4 3/8
1A DATAo 3 3/8
1A DATAo 2 3/8
1A DATAo 1 3/8
1A DATAo 0 3/8
1A DATAe 7 3/8
1A DATAe 6 3/8
1A DATAe 5 3/8
1A DATAe 4 3/8
1A DATAe 3 3/8
1A DATAe 2 3/8
1A DATAe 1 3/8
1A DATAe 0 3/8
A APC 6/8
SD DATA 7 7/8
SD DATA 6 7/8
SD DATA 5 7/8
SD DATA 4 7/8
SD DATA 3 7/8
SD DATA 2 7/8
SD DATA 1 7/8
SD DATA 0 7/8
OE1 7/8
16CK1 2/8
16CK1 2/8
A CGW RST 6/8
A WHRST 1 6/8
A VEG 6/8
A VEG 6/8
32CK1 2/8
32CK1 2/8
IDX U 6/8
IDX L 6/8
6/8 A HZERO
6/8 A DLHZERO
6/8 ADO
A/D CONV.
A +5V(A)
R114 1k
Q6 2SA1115TP-F
R109 1k
7/8 A VE IN
CN142
TBC14,153-9BC
10C A VELO(X)
11C A VELO(G)
R108 100k
R304 20k
RV10 200
RV9 200
R305 390
+12V
*2
R107 2k
C173 120p
R112 10k
TP19 VELOCITY ERROR
R113 220
D1 RD3.9ES-T1B
C174 0.1
ICN16 TL082CPS (1/2)
ICP15 CXD1175AM
P15
RB24×8
R128 100
C224 68p
R129 10k
C222 0.1
C223 47 16V
C221 0.1
C220 0.1
2/8 RV10
6/8 PLAY STATUS
S/N 10101-
SEGMENT INDEX DETECTOR
R121 10k
C229 68p
R131 51
C249 0.1
C260 0.1
+5V

RV10;B-VE INPUT OFFSET

RV9 ;A-VE INPUT OFFSET

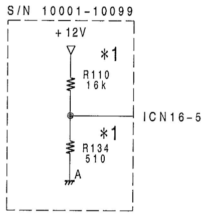
S/N 10001-10099
+12V
*1
R110 16k
ICN16-5
*1
R134 510
A

NOTE;

ADDRESS	MARK	CHANGE INFORMATION	SERIAL NO.
C4	*1	R110 16k,R134 510 DELETED R304 47k R305 1k RV9 200,RV10 200, ADDED	#10101-
	*2	R107 CHANGED 3300 → 2000	
B1	*3	R229 10K ADDED	#10201-
D1	*4	WIRING ADDED	
F1	*5	RB25 10k×8 DELETED	
H4	*6	IDX U,IDX L DELETED	#10801-

A Data S-P Convert

TBC-15 BOARD (1/

BOARD NO.1-634-493-11,12,13,14
HDV-10(J) ;#10001-
HDV-10(UC) ;#10001-
HDV-10(EK) ;#10001-

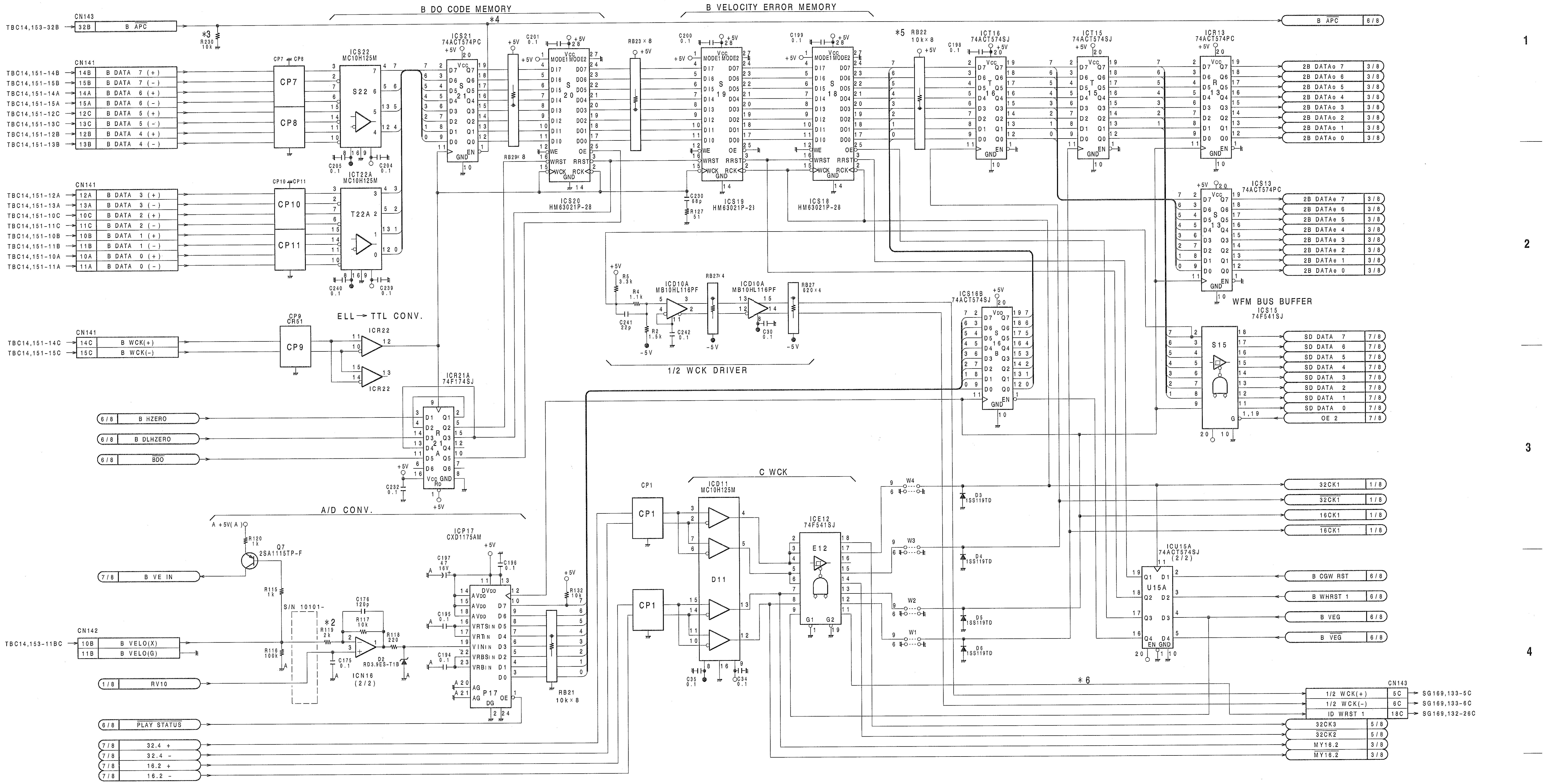
B DO CODE MEMORY
B VELOCITY ERROR MEMORY
CN143
TBC14,153-32B
32B B APC
B APC 6/8
CN141
TBC14,151-14B 14B B DATA 7 (+)
TBC14,151-15B 15B B DATA 7 (-)
TBC14,151-14A 14A B DATA 6 (+)
TBC14,151-15A 15A B DATA 6 (-)
TBC14,151-12C 12C B DATA 5 (+)
TBC14,151-13C 13C B DATA 5 (-)
TBC14,151-12B 12B B DATA 4 (+)
TBC14,151-13B 13B B DATA 4 (-)
TBC14,151-12A 12A B DATA 3 (+)
TBC14,151-13A 13A B DATA 3 (-)
TBC14,151-10C 10C B DATA 2 (+)
TBC14,151-11C 11C B DATA 2 (-)
TBC14,151-10B 10B B DATA 1 (+)
TBC14,151-11B 11B B DATA 1 (-)
TBC14,151-10A 10A B DATA 0 (+)
TBC14,151-11A 11A B DATA 0 (-)
CP7 CP8 CP10 CP11
ICS22 MC10H125M
ICT22A MC10H125M
ICS21 74ACT574PC
ICS20 HM63021P-28
ICS19 HM63021P-28
ICS18 HM63021P-28
ICT16 74ACT574SJ
ICT15 74ACT574SJ
ICR13 74ACT574PC
ICS13 74ACT574PC
RB22 10k×8
RB23×8
RB29×8
2B DATAo 7 3/8
2B DATAo 6 3/8
2B DATAo 5 3/8
2B DATAo 4 3/8
2B DATAo 3 3/8
2B DATAo 2 3/8
2B DATAo 1 3/8
2B DATAo 0 3/8
2B DATAe 7 3/8
2B DATAe 6 3/8
2B DATAe 5 3/8
2B DATAe 4 3/8
2B DATAe 3 3/8
2B DATAe 2 3/8
2B DATAe 1 3/8
2B DATAe 0 3/8
ELL → TTL CONV.
CP9 CR51
TBC14,151-14C 14C B WCK(+)
TBC14,151-15C 15C B WCK(-)
ICR22
ICR21A 74F174SJ
6/8 B HZERO
6/8 B DLHZERO
6/8 BDO
ICD10A MB10HL116PF
RB27 620×4
1/2 WCK DRIVER
ICS16B 74ACT574SJ
WFM BUS BUFFER
ICS15 74F541SJ
SD DATA 7 7/8
SD DATA 6 7/8
SD DATA 5 7/8
SD DATA 4 7/8
SD DATA 3 7/8
SD DATA 2 7/8
SD DATA 1 7/8
SD DATA 0 7/8
OE 2 7/8
A/D CONV.
A +5V(A)
Q7 2SA1115TP-F
7/8 B VE IN
S/N 10101-
CN142
TBC14,153-11BC 10B B VELO(X) 11B B VELO(G)
ICN16 (2/2)
D2 RD3.9ES-T1B
ICP17 CXD1175AM
RB21 10k×8
1/8 RV10
6/8 PLAY STATUS
7/8 32.4 +
7/8 32.4 -
7/8 16.2 +
7/8 16.2 -
C WCK
ICD11 MC10H125M
ICE12 74F541SJ
W1 W2 W3 W4
D3 D4 D5 D6 1SS119TD
32CK1 1/8
32CK1 1/8
16CK1 1/8
16CK1 1/8
ICU15A 74ACT574SJ (2/2)
B CGW RST 6/8
B WHRST 1 6/8
B VEG 6/8
B VEG 6/8
*6
CN143
1/2 WCK(+) 5C SG169,133-5C
1/2 WCK(-) 6C SG169,133-6C
ID WRST 1 18C SG169,132-26C
32CK3 5/8
32CK2 5/8
MY16.2 3/8
MY16.2 3/8
1 2 3 4 5

NOTE;

ADDRESS	MARK	CHANGE INFORMATION	SERIAL NO.
C4	*1	R111 16k,R135 510 DELETED	#10101-
	*2	R119 CHANGED 3300 → 2000	
B1	*3	R230 10K ADDED	#10201-
D1	*4	WIRING ADDED	
E1	*5	RB22 10k×8 DELETED	
F4	*6	ID WRST1 WIRING ERROR	#10801-

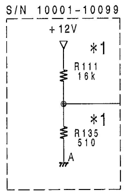
S/N 10001-10099
+12V
*1
R111 16k
*1
R135 510
ICN16-3

B Data S-P Convert

TBC-15 BOARD (2/8)

BOARD NO.1-634-493-11,12,13,14
HDV-10(J) ;#10001-
HDV-10(UC) ;#10001-
HDV-10(EK) ;#10001-

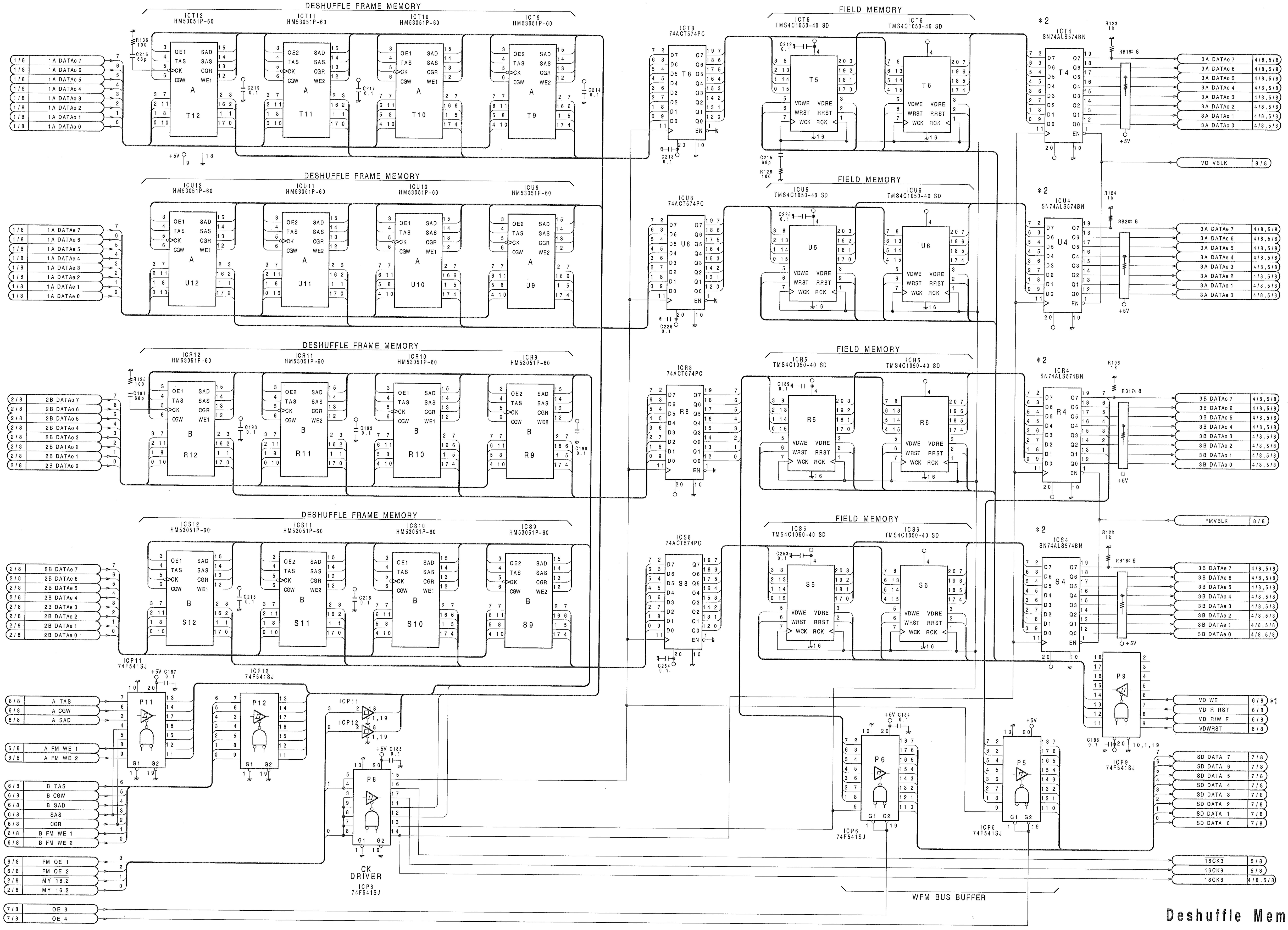
DESHUFFLE FRAME MEMORY
ICT12 HM53051P-60
ICT11 HM53051P-60
ICT10 HM53051P-60
ICT9 HM53051P-60
ICU12 HM53051P-60
ICU11 HM53051P-60
ICU10 HM53051P-60
ICU9 HM53051P-60
ICR12 HM53051P-60
ICR11 HM53051P-60
ICR10 HM53051P-60
ICR9 HM53051P-60
ICS12 HM53051P-60
ICS11 HM53051P-60
ICS10 HM53051P-60
ICS9 HM53051P-60
OE1 OE2 TAS CK CGW SAD SAS CGR WE1 WE2
ICT8 74ACT574PC
ICU8 74ACT574PC
ICR8 74ACT574PC
ICS8 74ACT574PC
FIELD MEMORY
ICT5 TMS4C1050-40 SD
ICT6 TMS4C1050-40 SD
ICU5 TMS4C1050-40 SD
ICU6 TMS4C1050-40 SD
ICR5 TMS4C1050-40 SD
ICR6 TMS4C1050-40 SD
ICS5 TMS4C1050-40 SD
ICS6 TMS4C1050-40 SD
VDWE VDRE WRST RRST WCK RCK
*2 ICT4 SN74ALS574BN
*2 ICU4 SN74ALS574BN
*2 ICR4 SN74ALS574BN
*2 ICS4 SN74ALS574BN
1A DATAo 7 … 1A DATAo 0 1/8
2B DATAo 7 … 2B DATAo 0 2/8
3A DATAo 7 … 3A DATAo 0 4/8,5/8
3B DATAo 7 … 3B DATAo 0 4/8,5/8
VD VBLK 8/8
FMVBLK 8/8
A TAS 6/8
A CGW 6/8
A SAD 6/8
A FM WE 1 6/8
A FM WE 2 6/8
B TAS 6/8
B CGW 6/8
B SAD 6/8
SAS 6/8
CGR 6/8
B FM WE 1 6/8
B FM WE 2 6/8
FM OE 1 6/8
FM OE 2 6/8
MY 16.2 2/8
MY 16.2 2/8
OE 3 7/8
OE 4 7/8
ICP11 74F541SJ
ICP12 74F541SJ
CK DRIVER ICP8 74F541SJ
ICP6 74F541SJ
ICP5 74F541SJ
ICP9 74F541SJ
VD WE 6/8 *1
VD R RST 6/8
VD R/W E 6/8
VDWRST 6/8
SD DATA 7 … SD DATA 0 7/8
16CK3 5/8
16CK9 5/8
16CK8 4/8,5/8
WFM BUS BUFFER
1 2 3 4 5
A B C D E F G H

ADDRESS	MARK	CHANGE INFORMATION	SERIAL NO.
H4	*1	WIRING ADDED	#10201-
G1 G2 G3	*2	ICT4,U4,R4,S4 SN74ALS574AN → SN74ALS574BN CHANGED	#10601-

NOTE;

Deshuffle Memory

TBC-15 BOARD (3/8)

BOARD NO.1-634-493-11,12,13,14
HDV-10(J) ;#10001-
HDV-10(UC) ;#10001-
HDV-10(EK) ;#10001-

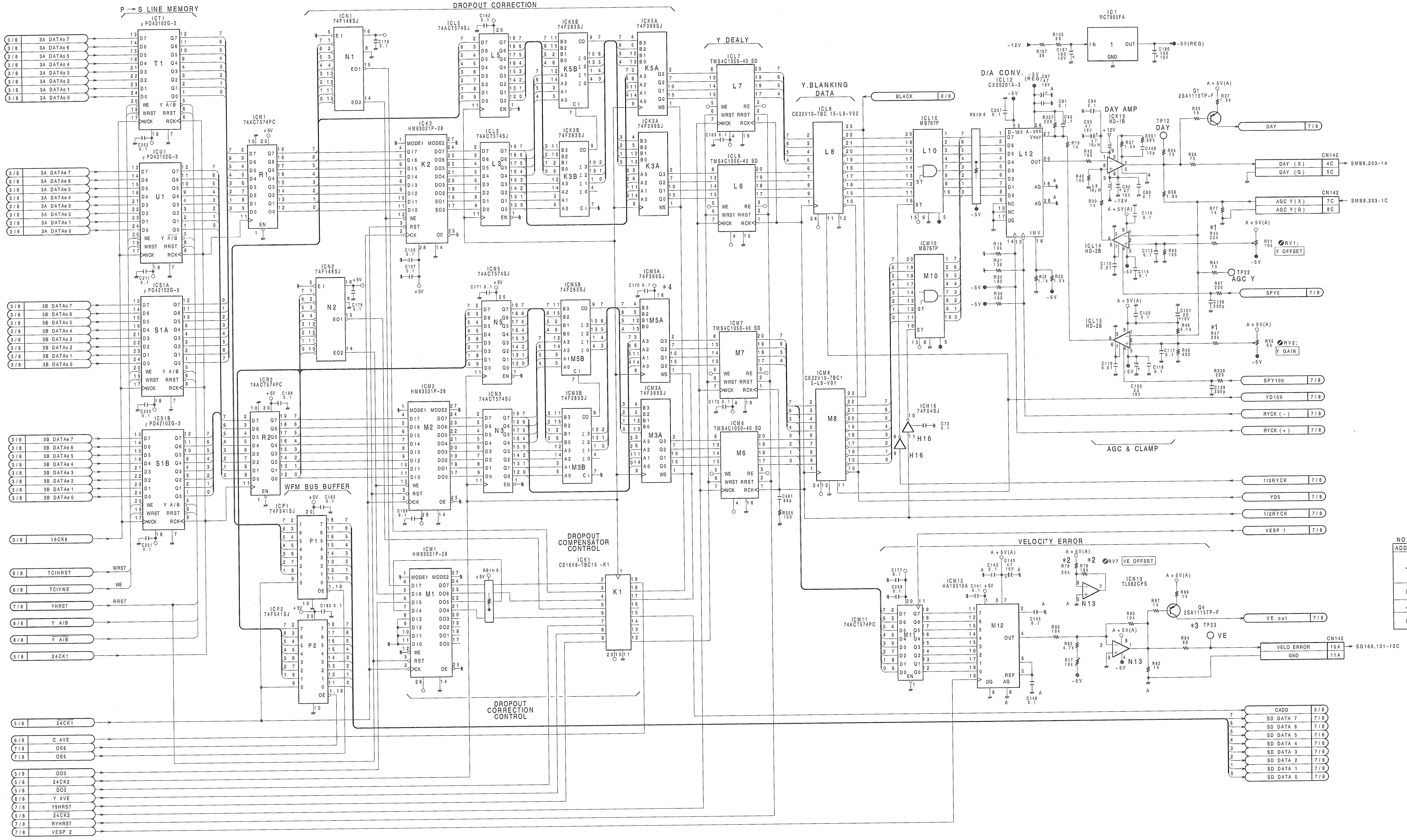
P→S LINE MEMORY
DROPOUT CORRECTION
Y DEALY
Y.BLANKING DATA
D/A CONV.
DAY AMP
AGC & CLAMP
VELOCITY ERROR
WFM BUS BUFFER
DROPOUT COMPENSATOR CONTROL
DROPOUT CORRECTION CONTROL
ICT1 μPD42102G-3
ICU1 μPD42102G-3
ICS1A μPD42102G-3
ICS1B μPD42102G-3
ICR1 74ACT574PC
ICR2 74ACT574PC
ICN1 74F148SJ
ICN2 74F148SJ
ICK2 HM63021P-28
ICM2 HM63021P-28
ICM1 HM63021P-28
ICL5 74ACT574SJ
ICL3 74ACT574SJ
ICN5 74ACT574SJ
ICN3 74ACT574SJ
ICK5B 74F283SJ
ICK3B 74F283SJ
ICM5B 74F283SJ
ICM3B 74F283SJ
ICK5A 74F399SJ
ICK3A 74F399SJ
ICM5A 74F399SJ
ICM3A 74F399SJ
ICP1 74F541SJ
ICP2 74F541SJ
ICK1 CE16V8-TBC15-K1
ICL7 TMS4C1050-40 SD
ICL6 TMS4C1050-40 SD
ICM7 TMS4C1050-40 SD
ICM6 TMS4C1050-40 SD
ICL8 CE22V10-TBC 15-L8-V02
ICM8 CE22V10-TBC1 5-L8-V01
ICL10 MB767P
ICM10 MB767P
ICL12 CX20201A-3
ICH16 74F04SJ
IC1 RC7905FA
ICL13 HD-1B
ICL14 HD-2B
ICL15 HD-2B
ICM11 74ACT574PC
ICM12 HA19510A
ICN13 TL082CPS
Q1 2SA1115TP-F
Q4 2SA1115TP-F
-12V
-5V(REG)
BLACK 8/8
DAY 7/8
DAY (X) 4C
DAY (G) 5C
AGC Y(X) 7C
AGC Y(G) 8C
CN142
SMB8,203-1A
SMB8,203-1C
TP12 DAY
TP22 AGC Y
TP23
RV1 Y OFFSET
RV2 Y GAIN
RV7 VE OFFSET
SPY0 7/8
SPY100 7/8
YD100 7/8
RYCK (-) 7/8
RYCK (+) 7/8
1/2RYCK 7/8
YD0 7/8
1/2RYCK 7/8
VESP 1 7/8
VE out 7/8
VE
VELO ERROR 10A
GND 11A
SG169,131-12C
CADD 5/8
SD DATA 7 7/8
SD DATA 6 7/8
SD DATA 5 7/8
SD DATA 4 7/8
SD DATA 3 7/8
SD DATA 2 7/8
SD DATA 1 7/8
SD DATA 0 7/8
3/8 3A DATAo 7
3/8 3A DATAo 6
3/8 3A DATAo 5
3/8 3A DATAo 4
3/8 3A DATAo 3
3/8 3A DATAo 2
3/8 3A DATAo 1
3/8 3A DATAo 0
3/8 3A DATAe 7
3/8 3A DATAe 6
3/8 3A DATAe 5
3/8 3A DATAe 4
3/8 3A DATAe 3
3/8 3A DATAe 2
3/8 3A DATAe 1
3/8 3A DATAe 0
3/8 3B DATAo 7
3/8 3B DATAo 6
3/8 3B DATAo 5
3/8 3B DATAo 4
3/8 3B DATAo 3
3/8 3B DATAo 2
3/8 3B DATAo 1
3/8 3B DATAo 0
3/8 3B DATAe 7
3/8 3B DATAe 6
3/8 3B DATAe 5
3/8 3B DATAe 4
3/8 3B DATAe 3
3/8 3B DATAe 2
3/8 3B DATAe 1
3/8 3B DATAe 0
3/8 16CK8
6/8 TCIHRST
6/8 TCIYWE
7/8 YHRST
6/8 Y A/B
6/8 Y A/B
5/8 24CK1
5/8 24CK1
5/8 C AVE
7/8 OE6
7/8 OE5
5/8 DO3
5/8 24CK2
5/8 DO3
6/8 Y AVE
7/8 Y9HRST
7/8 24CK2
7/8 RYHRST
7/8 VESP 2
WRST
WE
RRST

NOTE;

ADDRESS	MARK	CHANGE INFORMATION	SERIAL NO.
J 2	*1	R44 CHANGED 15k → 22k R47 CHANGED 12k → 33k	#10101-
I 4	*2	R78 20k, R79 18k DELETED	#10201-
J 4	*3	TP23 ADDED	#10301-
F 3	*4	ICM5A-20 → ICM5A-16 CHANGED	#10801-

Y.Process

TBC-15 BOARD (4/8)

BOARD NO.1-634-493-11,12,13,14
HDV-10(J) ;#10001-
HDV-10(UC) ;#10001-
HDV-10(EK) ;#10001-

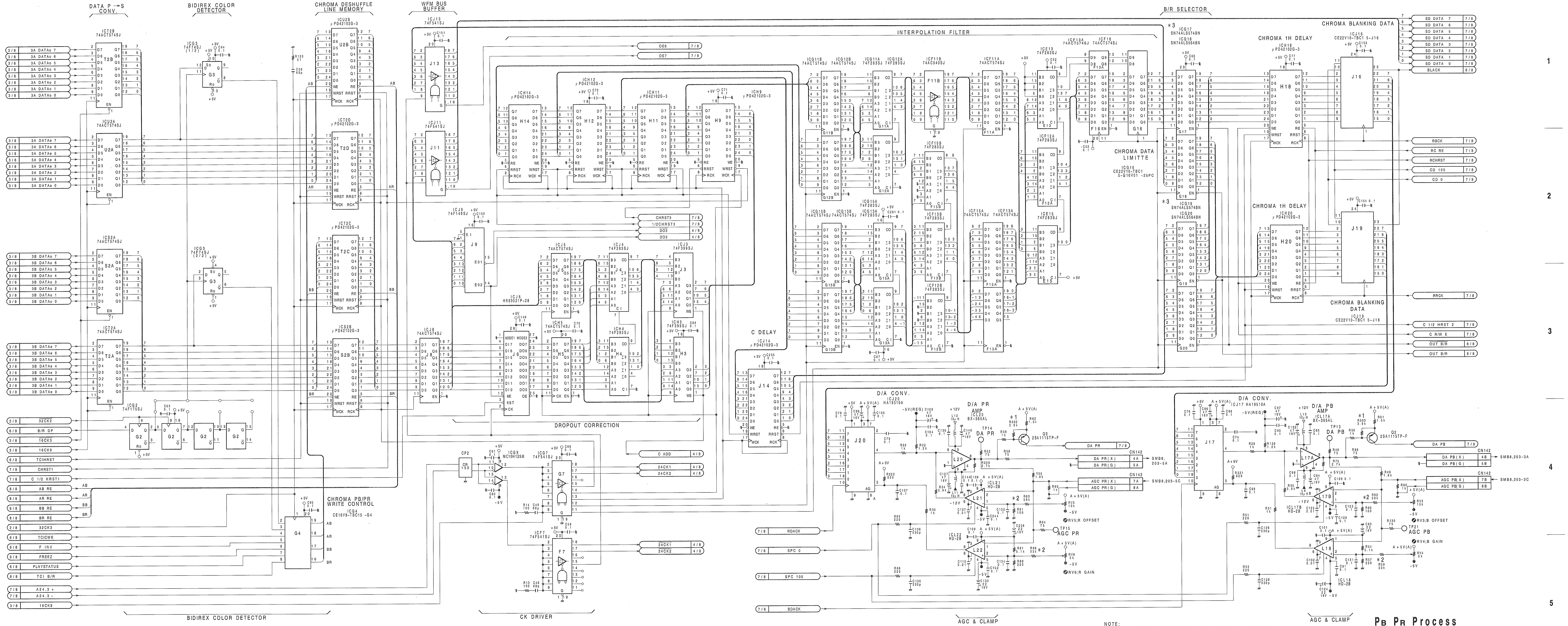
DATA P → S CONV.
BIDIREX COLOR DETECTOR
CHROMA DESHUFFLE LINE MEMORY
WFM BUS BUFFER
INTERPOLATION FILTER
B/R SELECTOR
CHROMA 1H DELAY
CHROMA BLANKING DATA
CHROMA DATA LIMITTE
C DELAY
DROPOUT CORRECTION
CHROMA PB/PR WRITE CONTROL
CK DRIVER
D/A CONV.
D/A PR AMP
D/A PB AMP
DA PR
DA PB
AGC PR
AGC PB
RV5;R OFFSET
RV6;R GAIN
RV3;B OFFSET
RV4;B GAIN
AGC & CLAMP
BIDIREX COLOR DETECTOR
SMB8,203-5A
SMB8,203-5C
SMB8,203-3A
SMB8,203-3C
1
2
3
4
5

NOTE:

ADDRESS	MARK	CHANGE INFORMATION	SERIAL NO.
K4,H4	*1	R302,R303 3.9k ADDED	#10101-
H5,K5	*2	R59 10k → 33k R63 39k → 56k R69 10k → 33k R92 39k → 56k CHANGED	
J1,J2	*3	ICG17,G19 CHANGED SN74ALS574AN → SN74ALS574BN	#10601-

PB PR Process

TBC-15 BOARD (5/8)

BOARD NO.1-634-493-11,12,13,14
HDV-10(J) ;#10001-
HDV-10(UC) ;#10001-
HDV-10(EK) ;#10001-

S/N;10201 and higher

AWH/BWH PULSE GEN.
ACH.WRITE H PULSE GEN
PB.V PULSE GEN
PBV RE GEN.
BCH.WRITE H PULSE GEN
A AUTO V GEN
WRITE UPPER LINE ADDRESS GEN
WRITE LOWER LINE ADDRESS GEN
BCH.AUTO V SYNC GEN
READ UPPER LINE ADDRESS GEN
READ LOWER LINE ADDRESS GEN
B LINE ADDRESS P → S CONV.
A LINE ADDRESS P → S CONV.
FRAME MEMORY RE CONT
FREEZE CONTROL
FRAME MEMORY WE CONT
ACH.LINE ADDRESS SELECTOR
ACH.PBV SELECTOR
BCH.PBV SELECTOR
B PBV SELECT
A PBV SELECT
FRAME MEMORY WRITE ENABLE CONTROL
PB.SEGMENT SELECTOR
ACH.LINE ADDRESS SELECTOR
SEGMENT DETECTOR
FRAME MEMORY CONT
ACH.SERIAL ADDRESS GEN CONTROL
BCH.SERIAL ADDRESS GEN CONTROL
WFM TRIG SELECTOR
S/N:10801-
S/N:10201-10790
IPR1,122-29A
SG169,132-29A
TBC14,152-29A
DM77B,162-29A
DM77A,172-29A
IV23,182-29A
MD65,192-29A
A
B
C
D
E
F
G
H
I
J
K
L
M
N
O
1
2
3
4
5

NOTE:

ADDRESS	MARK	CHANGE INFORMATION	SERIAL NO.
C3	*1	R17 NO MOUNT → 68k C14 NO MOUNT → 0.022	#10201-
G4	*2	ICD2 SN74HC74N →ICD2A SN74HC74ANS	
F1	*3	ICD2B SN74HC74ANS ADDED	
K5	*4	Q8 2SA1115TP-F DELETE	
F5	*5	ICB9 9,10PIN WIRING ADDED	
I2		ICB6 1,23PIN WIRING CHANGED	
D3	*6	R1 CHANGED 1000 → 560	#10301-
D3	*7	ID2 ADDED	
D3	*8	R1 CHANGED 560 → 1.1K	#10401-
D2	*9	ICD24A-4 → ICD24A-14 CHANGED	#10801-
L4	*10	WIRING ERROR	
E4	*11	C410 47p ADDED	
C5	*12	ICH1 CE16V8-TBC15-H1 ADDED	

Memory Control

TBC-15 BOARD (6/8)

BOARD NO.1-634-493-12,13,14
HDV-10(J) ;#10201-
HDV-10(UC) ;#10201-
HDV-10(EK) ;#10201-

S/N;10001 through 10199

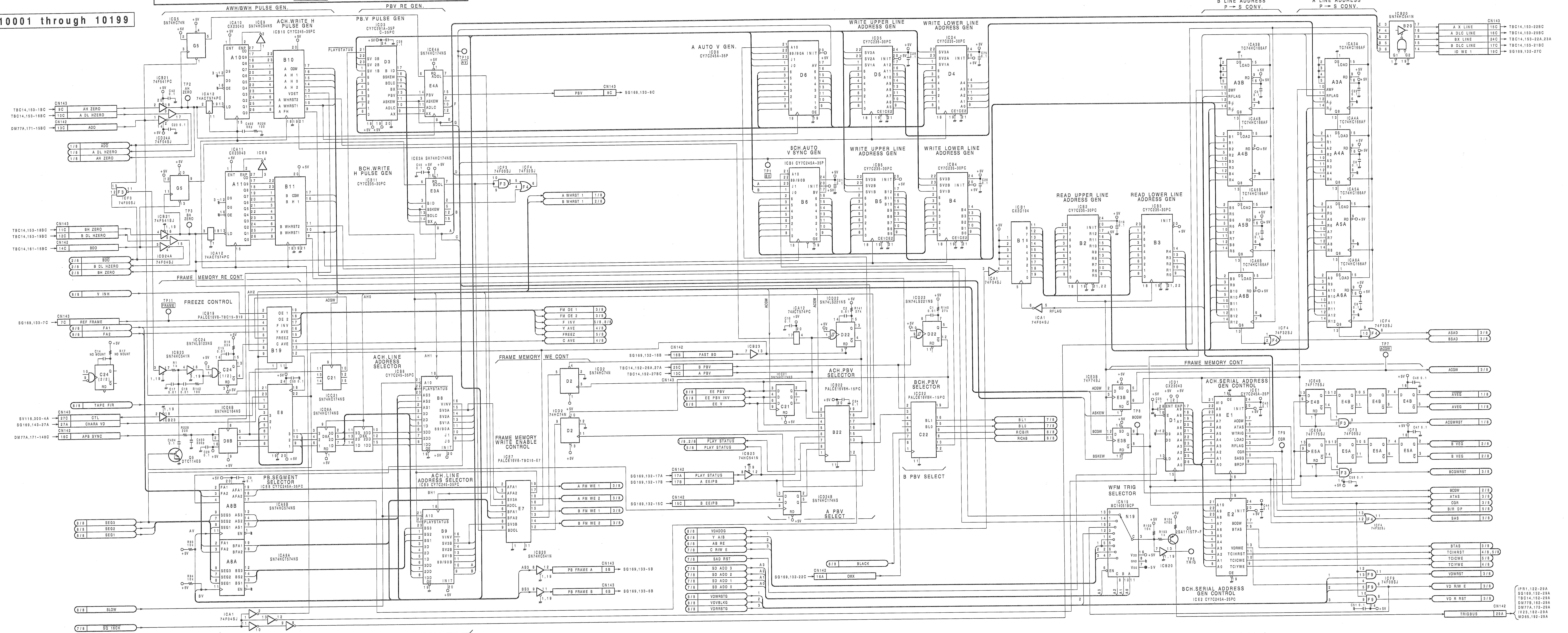
AWH/BWH PULSE GEN.
ACH.WRITE H PULSE GEN
PBV RE GEN.
PB.V PULSE GEN
BCH.WRITE H PULSE GEN
A AUTO V GEN.
WRITE UPPER LINE ADDRESS GEN
WRITE LOWER LINE ADDRESS GEN
BCH.AUTO V SYNC GEN
READ UPPER LINE ADDRESS GEN
READ LOWER LINE ADDRESS GEN
B LINE ADDRESS P→S CONV.
A LINE ADDRESS P→S CONV.
FRAME MEMORY RE CONT
FREEZE CONTROL
ACH.LINE ADDRESS SELECTOR
FRAME MEMORY WE CONT
ACH.PBV SELECTOR
BCH.PBV SELECTOR
B PBV SELECT
A PBV SELECT
FRAME MEMORY WRITE ENABLE CONTROL
ACH.LINE ADDRESS SELECTOR
PB.SEGMENT SELECTOR
SEGMENT DETECTOR
FRAME MEMORY CONT
ACH.SERIAL ADDRESS GEN CONTROL
WFM TRIG SELECTOR
BCH.SERIAL ADDRESS GEN CONTROL
A B C D E F G H I J K L M N O
1 2 3 4 5

Memory Control

TBC-15 BOARD (6/8)

BOARD NO.1-634-493-11
HDV-10(J) ;#10001-10199
HDV-10(UC) ;#10001-10199
HDV-10(EK) ;#10001-10199

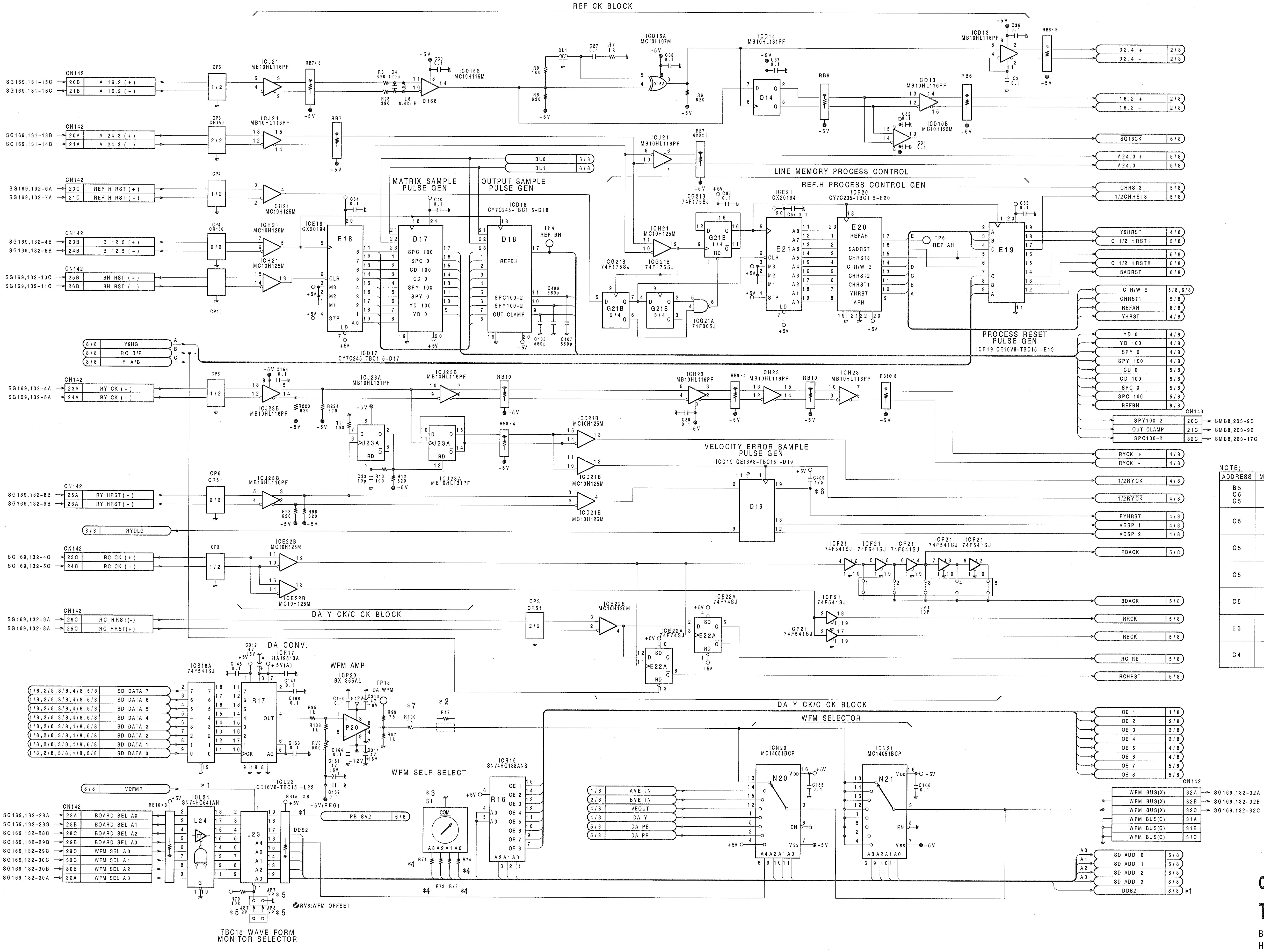
REF CK BLOCK
LINE MEMORY PROCESS CONTROL
REF.H PROCESS CONTROL GEN
MATRIX SAMPLE PULSE GEN
OUTPUT SAMPLE PULSE GEN
PROCESS RESET PULSE GEN
VELOCITY ERROR SAMPLE PULSE GEN
DA Y CK/C CK BLOCK
DA CONV.
WFM AMP
WFM SELF SELECT
WFM SELECTOR
TBC15 WAVE FORM MONITOR SELECTOR
RV8;WFM OFFSET
CN142
CN143
E18
D17
D18
E20
E21
E19
D19
G21B
J23A
E22A
R17
P20
R16
L24
L23
N20
N21
S1
32.4 +
32.4 -
16.2 +
16.2 -
SQ16CK
A24.3 +
A24.3 -
CHRST3
1/2CHRST3
Y9HRST
C 1/2 HRST1
C 1/2 HRST2
SADRST
C R/W E
CHRST1
REFAH
YHRST
YD 0
YD 100
SPY 0
SPY 100
CD 0
CD 100
SPC 0
SPC 100
REFBH
SPY100-2
OUT CLAMP
SPC100-2
RYCK +
RYCK -
1/2RYCK
RYHRST
VESP 1
VESP 2
RDACK
BDACK
RRCK
RBCK
RC RE
RCHRST
OE 1
OE 2
OE 3
OE 4
OE 5
OE 6
OE 7
OE 8
WFM BUS(X)
WFM BUS(G)
SD ADD 0
SD ADD 1
SD ADD 2
SD ADD 3
DDS2
PB SV2
VDFMR
RYDLG
Y9HG
RC B/R
Y A/B
BL0
BL1
AVE IN
BVE IN
VEOUT
DA Y
DA PB
DA PR
SD DATA 7
SD DATA 6
SD DATA 5
SD DATA 4
SD DATA 3
SD DATA 2
SD DATA 1
SD DATA 0
BOARD SEL A0
BOARD SEL A1
BOARD SEL A2
BOARD SEL A3
WFM SEL A0
WFM SEL A1
WFM SEL A2
WFM SEL A3
A 16.2 (+)
A 16.2 (-)
A 24.3 (+)
A 24.3 (-)
REF H RST (+)
REF H RST (-)
B 12.5 (+)
B 12.5 (-)
BH RST (+)
BH RST (-)
RY CK (+)
RY CK (-)
RY HRST (+)
RY HRST (-)
RC CK (+)
RC CK (-)
RC HRST(-)
RC HRST(+)
SMB8,203-9C
SMB8,203-9B
SMB8,203-17C
SG169,132-32A
SG169,132-32B
SG169,132-32C
1
2
3
4
5
A
B
C
D
E
F
G
H

NOTE;

ADDRESS	MARK	CHANGE INFORMATION	SERIAL NO.
B5 C5 G5	*1	WIRING ADDED	#10201-
C5	*2	R18 10 DELETED	
C5	*3	S1 DELETED	#10801-
C5	*4	R71,R72,R73,R74 1K DELETED	
C5	*5	JP7,JP8,JS7 DELETED	
E3	*6	C409 47P ADDED	#10901-
C4	*7	R100 CHANGED 5.1K ⟶ 1K	

Clock Distribution

TBC-15 BOARD (7/8)

BOARD NO.1-634-493-11,12,13,14
HDV-10(J) ;#10001-
HDV-10(UC) ;#10001-
HDV-10(EK) ;#10001-

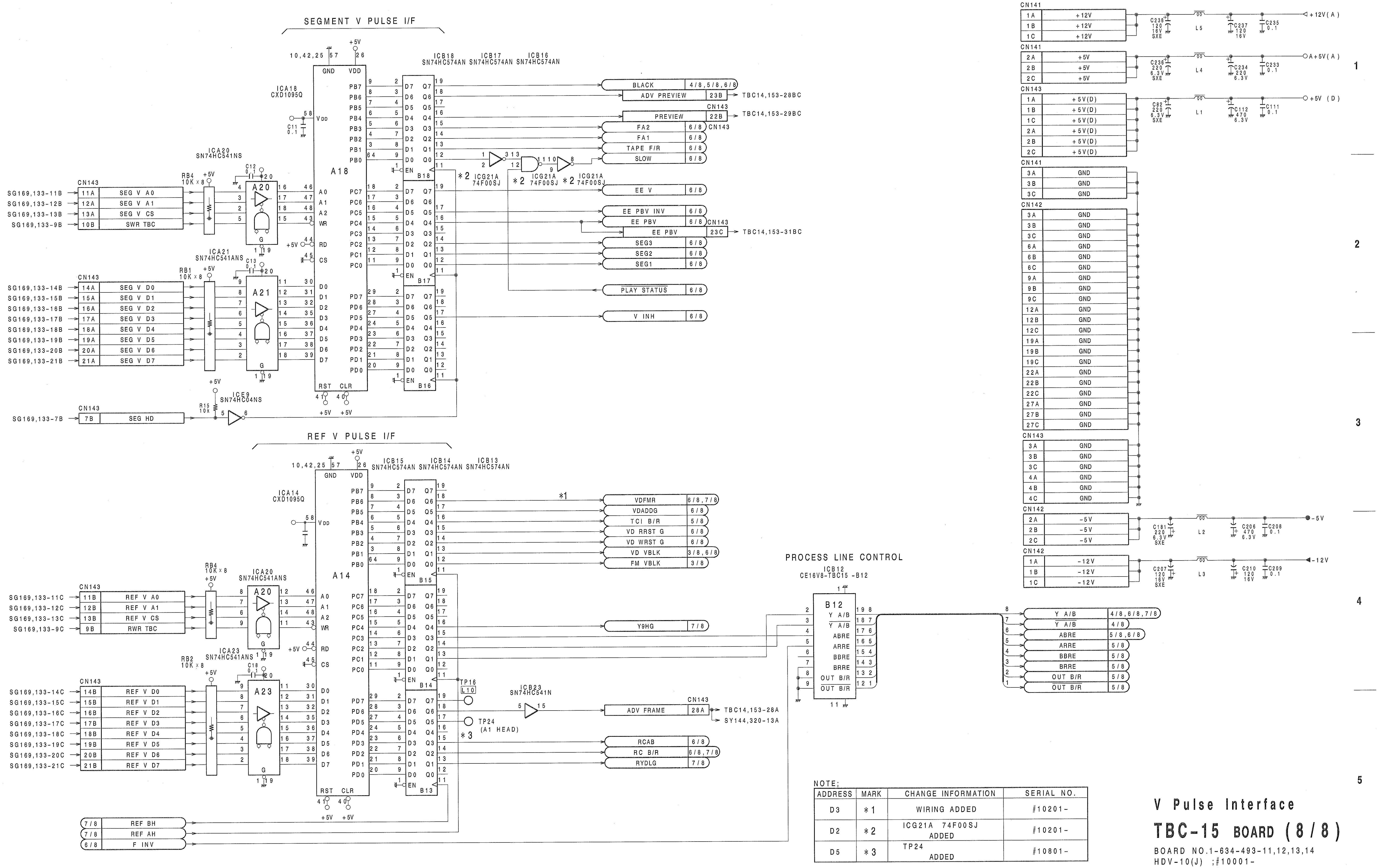
SEGMENT V PULSE I/F
ICA18 CXD1095Q
A18
ICB18 SN74HC574AN ICB17 SN74HC574AN ICB16 SN74HC574AN
B18
B17
B16
ICA20 SN74HC541NS
A20
ICA21 SN74HC541ANS
A21
ICE9 SN74HC04NS
CN143
SG169,133-11B
SG169,133-12B
SG169,133-13B
SG169,133-9B
SEG V A0
SEG V A1
SEG V CS
SWR TBC
SG169,133-14B
SG169,133-15B
SG169,133-16B
SG169,133-17B
SG169,133-18B
SG169,133-19B
SG169,133-20B
SG169,133-21B
SEG V D0
SEG V D1
SEG V D2
SEG V D3
SEG V D4
SEG V D5
SEG V D6
SEG V D7
SG169,133-7B
SEG HD
BLACK 4/8,5/8,6/8
ADV PREVIEW 23B TBC14,153-28BC
PREVIEW 22B TBC14,153-29BC
FA2 6/8
FA1 6/8
TAPE F/R 6/8
SLOW 6/8
*2 ICG21A 74F00SJ
EE V 6/8
EE PBV INV 6/8
EE PBV 6/8
EE PBV 23C TBC14,153-31BC
SEG3 6/8
SEG2 6/8
SEG1 6/8
PLAY STATUS 6/8
V INH 6/8
REF V PULSE I/F
ICA14 CXD1095Q
A14
ICB15 SN74HC574AN ICB14 SN74HC574AN ICB13 SN74HC574AN
B15
B14
B13
ICA20 SN74HC541ANS
ICA23 SN74HC541ANS
A23
SG169,133-11C
SG169,133-12C
SG169,133-13C
SG169,133-9C
REF V A0
REF V A1
REF V CS
RWR TBC
SG169,133-14C
SG169,133-15C
SG169,133-16C
SG169,133-17C
SG169,133-18C
SG169,133-19C
SG169,133-20C
SG169,133-21C
REF V D0
REF V D1
REF V D2
REF V D3
REF V D4
REF V D5
REF V D6
REF V D7
*1
VDFMR 6/8,7/8
VDADDG 6/8
TCI B/R 5/8
VD RRST G 6/8
VD WRST G 6/8
VD VBLK 3/8,6/8
FM VBLK 3/8
Y9HG 7/8
TP16
TP24 (A1 HEAD)
*3
ICB23 SN74HC541N
ADV FRAME 28A TBC14,153-28A SY144,320-13A
RCAB 6/8
RC B/R 6/8,7/8
RYDLG 7/8
7/8 REF BH
7/8 REF AH
6/8 F INV
PROCESS LINE CONTROL
ICB12 CE16V8-TBC15 -B12
B12
Y A/B 4/8,6/8,7/8
Y A/B 4/8
ABRE 5/8,6/8
ARRE 5/8
BBRE 5/8
BRRE 5/8
OUT B/R 5/8
OUT B/R 5/8
CN141 +12V +12V(A)
CN141 +5V A+5V(A)
CN143 +5V(D) +5V (D)
CN141 GND
CN142 GND
CN143 GND
CN142 -5V -5V
CN142 -12V -12V
L5 L4 L1 L2 L3
1
2
3
4
5

NOTE;

ADDRESS	MARK	CHANGE INFORMATION	SERIAL NO.
D3	*1	WIRING ADDED	#10201-
D2	*2	ICG21A 74F00SJ ADDED	#10201-
D5	*3	TP24 ADDED	#10801-

V Pulse Interface

TBC-15 BOARD (8/8)

BOARD NO.1-634-493-11,12,13,14
HDV-10(J) ;#10001-
HDV-10(UC) ;#10001-
HDV-10(EK) ;#10001-

A B C D E F G H

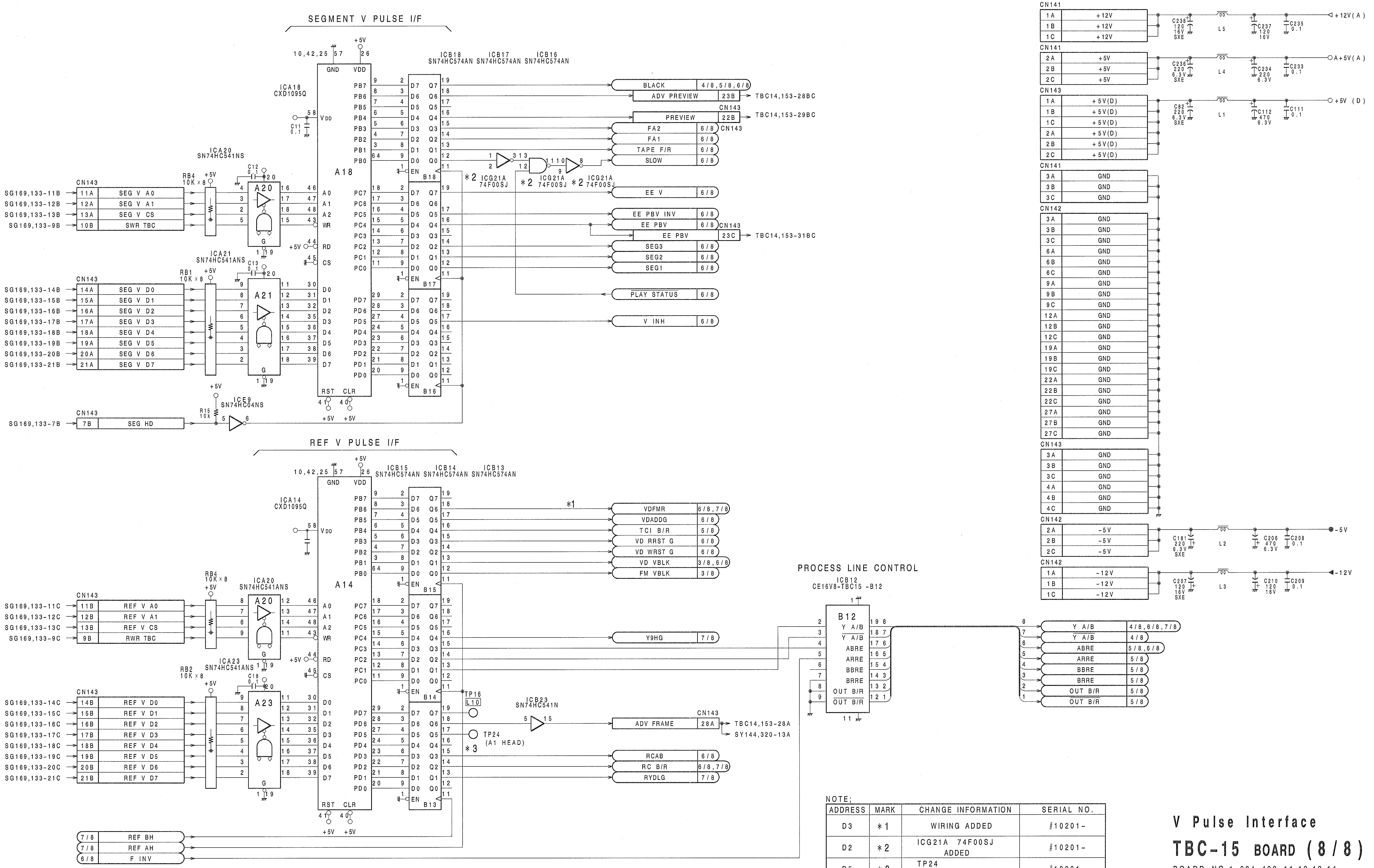
SEGMENT V PULSE I/F
ICA18 CXD1095Q
A18
ICB18 SN74HC574AN
ICB17 SN74HC574AN
ICB16 SN74HC574AN
ICA20 SN74HC541NS
ICA21 SN74HC541ANS
ICE9 SN74HC04NS
ICG21A 74F00SJ
CN143
SG169,133-11B
SG169,133-12B
SG169,133-13B
SG169,133-9B
SEG V A0
SEG V A1
SEG V CS
SWR TBC
SG169,133-14B
SG169,133-15B
SG169,133-16B
SG169,133-17B
SG169,133-18B
SG169,133-19B
SG169,133-20B
SG169,133-21B
SEG V D0
SEG V D1
SEG V D2
SEG V D3
SEG V D4
SEG V D5
SEG V D6
SEG V D7
SG169,133-7B
SEG HD
BLACK 4/8,5/8,6/8
ADV PREVIEW 23B
TBC14,153-28BC
PREVIEW 22B
TBC14,153-29BC
FA2 6/8
FA1 6/8
TAPE F/R 6/8
SLOW 6/8
EE V 6/8
EE PBV INV 6/8
EE PBV 6/8
EE PBV 23C
TBC14,153-31BC
SEG3 6/8
SEG2 6/8
SEG1 6/8
PLAY STATUS 6/8
V INH 6/8
REF V PULSE I/F
ICA14 CXD1095Q
A14
ICB15 SN74HC574AN
ICB14 SN74HC574AN
ICB13 SN74HC574AN
ICA20 SN74HC541ANS
ICA23 SN74HC541ANS
ICB23 SN74HC541N
SG169,133-11C
SG169,133-12C
SG169,133-13C
SG169,133-9C
REF V A0
REF V A1
REF V CS
RWR TBC
SG169,133-14C
SG169,133-15C
SG169,133-16C
SG169,133-17C
SG169,133-18C
SG169,133-19C
SG169,133-20C
SG169,133-21C
REF V D0
REF V D1
REF V D2
REF V D3
REF V D4
REF V D5
REF V D6
REF V D7
*1
VDFMR 6/8,7/8
VDADDG 6/8
TCI B/R 5/8
VD RRST G 6/8
VD WRST G 6/8
VD VBLK 3/8,6/8
FM VBLK 3/8
Y9HG 7/8
TP16
TP24 (A1 HEAD)
*3
ADV FRAME 28A
TBC14,153-28A
SY144,320-13A
RCAB 6/8
RC B/R 6/8,7/8
RYDLG 7/8
7/8 REF BH
7/8 REF AH
6/8 F INV
PROCESS LINE CONTROL
ICB12 CE16V8-TBC15 -B12
B12
Y A/B
ABRE
ARRE
BBRE
BRRE
OUT B/R
Y A/B 4/8,6/8,7/8
Y A/B 4/8
ABRE 5/8,6/8
ARRE 5/8
BBRE 5/8
BRRE 5/8
OUT B/R 5/8
OUT B/R 5/8
CN141 1A 1B 1C +12V
+12V(A)
CN141 2A 2B 2C +5V
A+5V(A)
CN143 1A 1B 1C 2A 2B 2C +5V(D)
+5V (D)
CN141 3A 3B 3C GND
CN142 GND
CN143 GND
CN142 2A 2B 2C -5V
-5V
CN142 1A 1B 1C -12V
-12V
L5 L4 L1 L2 L3
1 2 3 4 5

NOTE;

ADDRESS	MARK	CHANGE INFORMATION	SERIAL NO.
D3	*1	WIRING ADDED	#10201-
D2	*2	ICG21A 74F00SJ ADDED	#10201-
D5	*3	TP24 ADDED	#10801-

V Pulse Interface

TBC-15 BOARD (8/8)

BOARD NO.1-634-493-11,12,13,14
HDV-10(J) ;#10001-
HDV-10(UC) ;#10001-
HDV-10(EK) ;#10001-

S/N;10201 and higher

SYS DATA BUFFER
SYS DATA BUFFER
CONTROL LATCH
D/A CONVERTER
CHIP SELECTOR
CHIP SELECTOR
CHIP SELECTOR
I/O PORT EXPANDER
I/O PORT EXPANDER
1VD
LATCH
INVERTER
PLL FREQUENCY SYNTH
0/50/100 RF FREQUENCY PLL
LATCH
TRIG SELECTOR
BUFFER
LINE SELECTOR
LINE SELECTOR
WFM SIG AMP
WFM SIG AMP
A/D CONVERTER
PG PHASE DETECTOR
BOARD WFM SELECTOR
WFM TRIGGER SELECTOR
BOARD SELECTOR
LATCH
LATCH
LATCH
AMP
A
B
C
D
E
F
G
H
I
J
K
L
M
N
O
1
2
3
4
5

NOTE;

ADDRESS	MARK	CHANGE INFORMATION	SERIAL NO.
I5	*1	ID2 WIRING ADDED	#10401-
G2	*2	R281 1k ADDED	#10801-
G3	*3	R291 10k ADDED	
H5	*4	ID3 WIRING ADDED	
B5	*5	R512 CHANGED 15K → 10K	#11301-

Video Control Interface

SG-169 BOARD (1/3)

BOARD NO.1-634-492-12,13,14
HDV-10(J) ;#10201-
HDV-10(UC) ;#10201-
HDV-10(EK) ;#10201-

S/N;10001 through 10199

SYS DATA BUFFER
SYS ADDRESS BUFFER
CONTROL LATCH
D/A CONVERTER
CHIP SELECTOR
I/O PORT EXPANDER
1VD
LATCH
INVERTER
WFM TRIGGER SELECTOR
BOARD WFM SELECTOR
TRIG SELECTOR
LINE SELECTOR
A/D CONVERTER
WFM SIG AMP
BUFFER
PG PHASE DETECTOR
S/N 10101-
S/N 10001-10099
PLL FREQUENCY SYNTH
D152/160 RF FREQUENCY PLL
AMP
WFM 16M VCO
RF 38.06 (-)
RF 38.06 (+)
RF DMF (X)
RF DMF (Y)
WF SYNC PH
WF Y/C DL
1
2
3
4
5

NOTE;

ADDRESS	MARK	CHANGE INFORMATION	SERIAL NO.
L4 M4 N4	*1	C307,C308,C309,C310, C311,C312,C313,C314 C315,C316,C317,C318 C319 0.01 ADDED	#10101-
F5		ICP10 SN74HC04N R515 750 C360 0.01 ADDED	

Video Control Interface
SG-169 BOARD (1/3)

BOARD NO.1-634-492-11
HDV-10(J) ;#10001-10199
HDV-10(UC) ;#10001-10199
HDV-10(EK) ;#10001-10199

S/N;11201 and higher

CARD RACK-1 SG-169(2/3) SG-169(2/3) CARD RACK-1

CARD RACK-1 SG-169(2/3) SG-169(2/3) CARD RACK-1

INPUT SYNC SELECTOR
MAIN SYNC SEPARATOR
VCO
REFERENCE CLOCK GENERATOR
SUB SYNC SEPARATOR
MAIN SYNC SEPARATOR
SUB SYNC SEPARATOR
SEPARATOR
INTERVAL
GENERATOR LOCK
GENERATOR UNLOCK
REF H GENERATOR
REF V BUS CONTROL
SYS H GENERATOR
SYSTEM H PULSE GEN.1
SYSTEM H PULSE GEN.2
REFERENCE CLOCK GENERATOR
SYS H GENERATOR
V BLK TIMING GENERATOR
SYS PHASE COMP
SYSTEM CLOCK GENERATOR
REF V GENERATOR
REF LINE CONTROL DATA
REF V GENERATOR
TRI SYNC GENERATOR
OUTPUT SYNC DATA
V BLK TIMING GENERATOR
TCI SYNC GENERATOR
VELO COMP PLL
VELO COMP PLL
DELAY
VELO LAMP GENERATOR
VELO LAMP GENERATOR
CHROMA PHASE PLL
CHROMA PHASE PLL
DELAY
DELAY
TPI SYNC GENERATOR
A
B
C
D
E
F
G
H
I
J
K
L
M
N
O
1
2
3
4
5

Gen.Lock/Ref Sync Generator

SG-169 BOARD (2/3)

BOARD NO.1-634-492-14
HDV-10(J) ;#11201-
HDV-10(UC) ;#11201-
HDV-10(EK) ;#11201-

S/N;10201 through 11199

INPUT SYNC SELECTOR
MAIN SYNC SEPARATOR
VCO
REFERENCE CLOCK GENERATOR
SUB SYNC SEPARATOR
MAIN SYNC SEPARATOR
GENERATOR LOCK
REF H GENERATOR
REF V BUS CONTROL
SYSTEM H PULSE GEN.1
SYSTEM H PULSE GEN.2
SYS H GENERATOR
REFERENCE CLOCK GENERATOR
V BLK TIMING GENERATOR
SYS PHASE COMP
SYSTEM CLOCK GENERATOR
REF V GENERATOR
REF LINE CONTROL DATA
TRI SYNC GENERATOR
OUTPUT SYNC DATA
TGI SYNC GENERATOR
VELO COMP PLL
VELO LAMP GENERATOR
CHROMA PHASE PLL
DELAY
TPI SYNC GENERATOR
RC CK (-)
RC CK (+)
RC H RST (-)
RC H RST (+)
TBC15,142-24C
TBC15,142-23C
TBC15,142-26C
TBC15,142-25C
1
2
3
4
5

NOTE;

ADDRESS	MARK	CHANGE INFORMATION	SERIAL NO.
L1,J1	*1	WIRING ADDED	#10201-
F1	*2	C131 CHANGED 0.001 → 0.01	#10801-
F1	*3	F292 100 ADDED	

Gen.Lock/Ref Sync Generator

SG-169 BOARD (2/3)

BOARD NO.1-634-492-12,13,14
HDV-10(J) ;#10201-11199
HDV-10(UC) ;#10201-11199
HDV-10(EK) ;#10201-11199

CARD RACK-1 SG-169(2/3) SG-169(2/3) CARD RACK-1

S/N;10001 through 10199

INPUT SYNC SELECTOR
MAIN SYNC SEPARATOR
VCO
REFERENCE CLOCK GENERATOR
REF PHASE COMP
OSC SELECTOR
PLL LOCK DET
GENERATOR UNLOCK
GENERATOR LOCK
SUB SYNC SEPARATOR
MAIN SYNC SEPARATOR
SEPARATOR
SYSTEM CLOCK GENERATOR
SYS PHASE COMP
CHROMA PHASE PLL
DELAY
REF V GENERATOR
REF LINE CONTROL DATA
REF H GENERATOR
REF H PULSE GEN
REF V SUB CONTROL
SYS H GENERATOR
SYSTEM H PULSE GEN.1
SYSTEM H PULSE GEN.2
TRI SYNC GENERATOR
OUTPUT SYNC DATA
V BLK TIMING GENERATOR
TRI SYNC GENERATOR
VELO COMP PLL
VELO LAMP GENERATOR
REFERENCE CLOCK GENERATOR
SYS H GENERATOR
V BLK TIMING GENERATOR
REF H GENERATOR
TRI SYNC GENERATOR
VELO ERROR
RV1:FRONT PORCH BLK
RV2:BACK PORCH BLK
RV3:VELO GAIN (LAMP)
RV4:DC OFFSET
RV5:MOD BAL

Gen.Lock/Ref Sync
Generator

SG-169 BOARD (2/3)

BOARD NO.1-634-492-11
HDV-10(J) ;#10001-10199
HDV-10(UC) ;#10001-10199
HDV-10(EK) ;#10001-10199

NOTE;

ADDRESS	MARK	CHANGE INFORMATION	SERIAL NO.
M3	＊1	R7 CHANGED 100k → 390k	#10101-
O3	＊2	C320 680p C321 680p ADDED	
C1		C322 330p C323 330p ADDED	
C4	＊3	R58 CHANGED 620 → 330	

A B C D E F G H I J K L M N O

S/N;10201 and higher

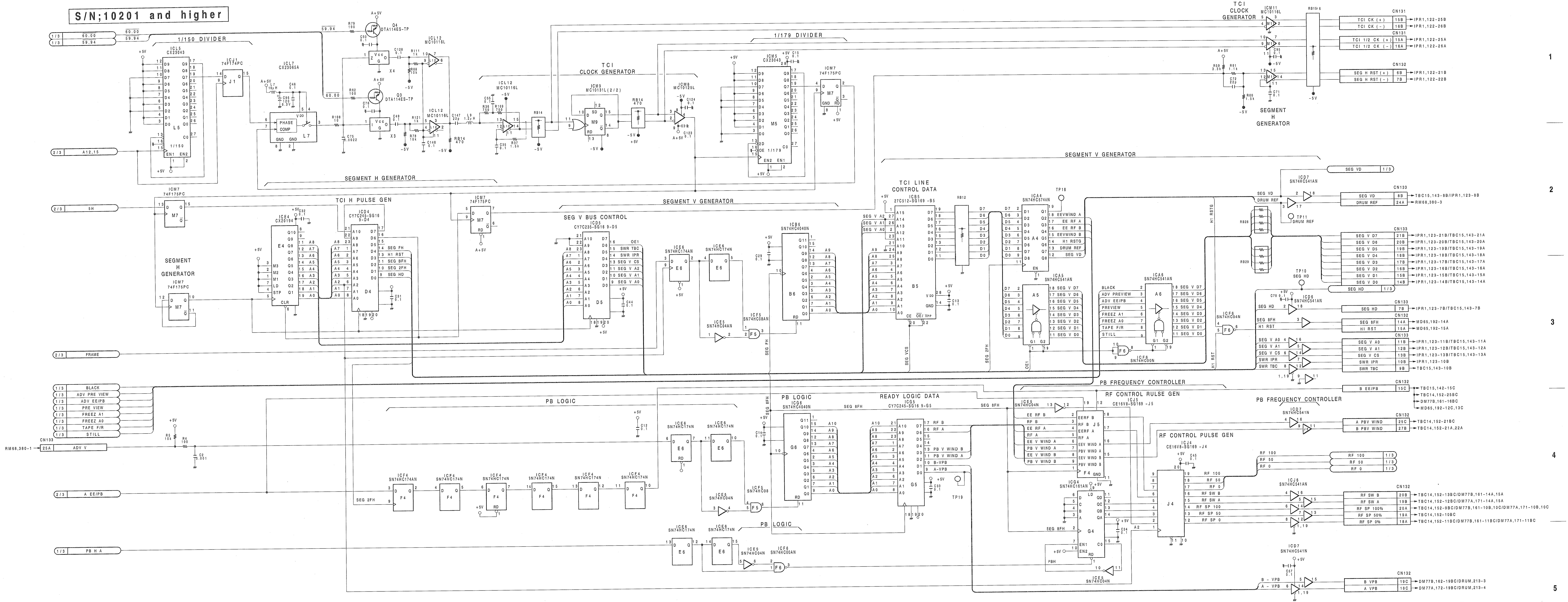
1/150 DIVIDER
ICL5 CX23043
L5
1/150
ICJ1 74F174PC
J1
ICL7 CX23065A
PHASE COMP
L7
Q4 DTA114ES-TP
Q3 DTA114ES-TP
X4
X3
ICL12 MC10116L
L9 1.2μH
TCI CLOCK GENERATOR
ICM9 MC10131L(2/2)
M9
RB14 470
ICM8 MC10125L
1/179 DIVIDER
ICM5 CX23043
M5
1/179
ICM7 74F175PC
M7
SEGMENT H GENERATOR
TCI CLOCK GENERATOR
ICM11 MC10116L
RB15
SEGMENT H GENERATOR
CN131
TCI CK (+) 15B IPR1,122-25B
TCI CK (-) 16B IPR1,122-26B
TCI 1/2 CK (+) 15A IPR1,122-25A
TCI 1/2 CK (-) 16A IPR1,122-26A
CN132
SEG H RST (+) 6B IPR1,122-21B
SEG H RST (-) 7B IPR1,122-22B
60.00
59.94
A12,15
SH
TCI H PULSE GEN
ICE4 CX20194
E4
ICD4 CY7C245-SG16 9-D4
D4
SEG FH
H1 RST
SEG 8FH
SEG 2FH
SEG HD
SEG V BUS CONTROL
ICD5 CY7C235-SG16 9-D5
D5
SWR TBC
SWR IPR
SEG V CS
SEG V A2
SEG V A1
SEG V A0
SEGMENT V GENERATOR
ICE6 SN74HC174AN
E6
ICE5 SN74HC04AN
ICF5 SN74HC08AN
F5
ICB6 SN74HC4040N
B6
TCI LINE CONTROL DATA
ICB5 27C512-SG169-B5
B5
RB12
SEGMENT V GENERATOR
ICA4 SN74HC574N
A4
EEVWIND A
EE RF A
EE RF B
EEVWIND B
H1 RSTG
DRUM REF
SEG VD
TP16
ICA5 SN74HC541AN
A5
ICA6 SN74HC541AN
A6
BLACK
ADV PREVIEW
ADV EE/PB
PREVIEW
FREEZ A1
FREEZ A0
TAPE F/R
STILL
ICF6 SN74HC00N
F6
ICF8 SN74HC04N
RB28
RB29
ICD7 SN74HC541AN
TP11 DRUM REF
TP10 SEG HD
ICD6 SN74HC541AN
SEG VD 1/3
CN133
SEG VD 8B TBC15,143-8B/IPR1,123-8B
DRUM REF 24A RM68,380-3
SEG V D7 21B IPR1,123-21B/TBC15,143-21A
SEG V D6 20B IPR1,123-20B/TBC15,143-20A
SEG V D5 19B IPR1,123-19B/TBC15,143-19A
SEG V D4 18B IPR1,123-18B/TBC15,143-18A
SEG V D3 17B IPR1,123-17B/TBC15,143-17A
SEG V D2 16B IPR1,123-16B/TBC15,143-16A
SEG V D1 15B IPR1,123-15B/TBC15,143-15A
SEG V D0 14B IPR1,123-14B/TBC15,143-14A
SEG HD 1/3
SEG HD 7B IPR1,123-7B/TBC15,143-7B
CN132
SEG 8FH 14A MD65,192-14A
H1 RST 15A MD65,192-15A
CN133
SEG V A0 11B IPR1,123-11B/TBC15,143-11A
SEG V A1 12B IPR1,123-12B/TBC15,143-12A
SEG V CS 13B IPR1,123-13B/TBC15,143-13A
SWR IPR 10B IPR1,123-10B
SWR TBC 9B TBC15,143-10B
CN132
B EE/PB 15C TBC15,142-15C
TBC14,152-25BC
DM77B,161-16BC
MD65,192-12C,13C
PB FREQUENCY CONTROLLER
1/3 BLACK
1/3 ADV PRE VIEW
1/3 ADV EE/PB
1/3 PRE VIEW
1/3 FREEZ A1
1/3 FREEZ A0
1/3 TAPE F/R
1/3 STILL
2/3 FRAME
CN133
RM68,380-1 25A ADV V
2/3 A EE/PB
1/3 PB H A
PB LOGIC
ICF4 SN74HC174AN
F4
SEG 2FH
PB LOGIC
ICG6 SN74HC4040N
G6
READY LOGIC DATA
ICG5 CY7C245-SG16 9-G5
G5
RF B
RF A
PB V WIND B
PB V WIND A
B-VPB
A-VPB
TP19
RF CONTROL RULSE GEN
ICJ5 CE16V8-SG169-J5
J5
ICE5 SN74HC04AN
EERF B
EERF A
EEV WIND A
EEV WIND B
PBV WIND A
PBV WIND B
ICF4
F4
ICG4 SN74HC161AN
G4
PBH
ICE5 SN74HC04AN
RF CONTROL PULSE GEN
ICJ4 CE16V8-SG169-J4
J4
RF 100
RF 50
RF 0
RF 100 1/3
RF 50 1/3
RF 0 1/3
PB FREQUENCY CONTROLLER
ICD7 SN74HC541N
CN132
A PBV WIND 25C TBC14,152-21BC
B PBV WIND 27B TBC14,152-21A,22A
ICJ6 SN74HC541AN
RF SW B
RF SW A
RF SP 100
RF SP 50
RF SP 0
CN132
RF SW B 20B TBC14,152-13BC/DM77B,161-14A,15A
RF SW A 19B TBC14,152-12BC/DM77B,171-14A,15A
RF SP 100% 20A TBC14,152-9BC/DM77B,161-10B,10C/DM77A,171-10B,10C
RF SP 50% 19A TBC14,152-10BC
RF SP 0% 18A TBC14,152-11BC/DM77B,161-11BC/DM77A,171-11BC
ICD7 SN74HC541N
B-VPB
A-VPB
CN132
B VPB 19C DM77B,162-19BC/DRUM,213-3
A VPB 18C DM77A,172-19BC/DRUM,213-4
1
2
3
4
5

TCI Sync Generator

SG-169 BOARD (3/3)

BOARD NO.1-634-492-12,13,14
HDV-10(J) ;#10201-
HDV-10(UC) ;#10201-
HDV-10(EK) ;#10201-

S/N;10001 through 10199

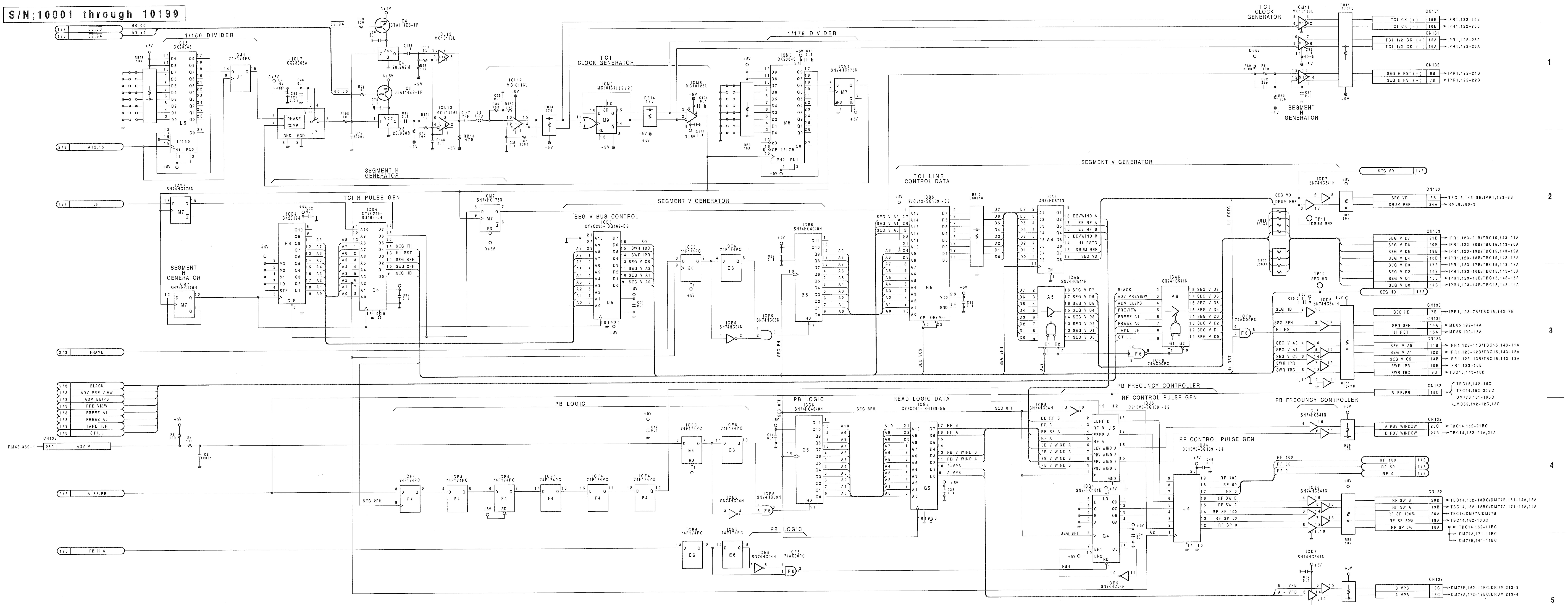
1/150 DIVIDER
TCI CLOCK GENERATOR
1/179 DIVIDER
SEGMENT H GENERATOR
TCI H PULSE GEN
SEGMENT V GENERATOR
SEG V BUS CONTROL
TCI LINE CONTROL DATA
TCI CLOCK GENERATOR
SEGMENT H GENERATOR
PB LOGIC
READ LOGIC DATA
PB FREQUNCY CONTROLLER
RF CONTROL PULSE GEN
60.00
59.94
A12,15
SH
FRAME
BLACK
ADV PRE VIEW
ADV EE/PB
PRE VIEW
FREEZ A1
FREEZ A0
TAPE F/R
STILL
ADV V
A EE/PB
PB H A
TCI CK (+)
TCI CK (-)
TCI 1/2 CK (+)
TCI 1/2 CK (-)
SEG H RST (+)
SEG H RST (-)
SEG VD
DRUM REF
SEG HD
B EE/PB
A PBV WINDOW
B PBV WINDOW
RF 100
RF 50
RF 0
B VPB
A VPB
1
2
3
4
5

TCI Sync Generator

SG-169 BOARD (3/3)

BOARD NO.1-634-492-11
HDV-10(J) ;#10001-10199
HDV-10(UC) ;#10001-10199
HDV-10(EK) ;#10001-10199

A B C D E F G H I J K L

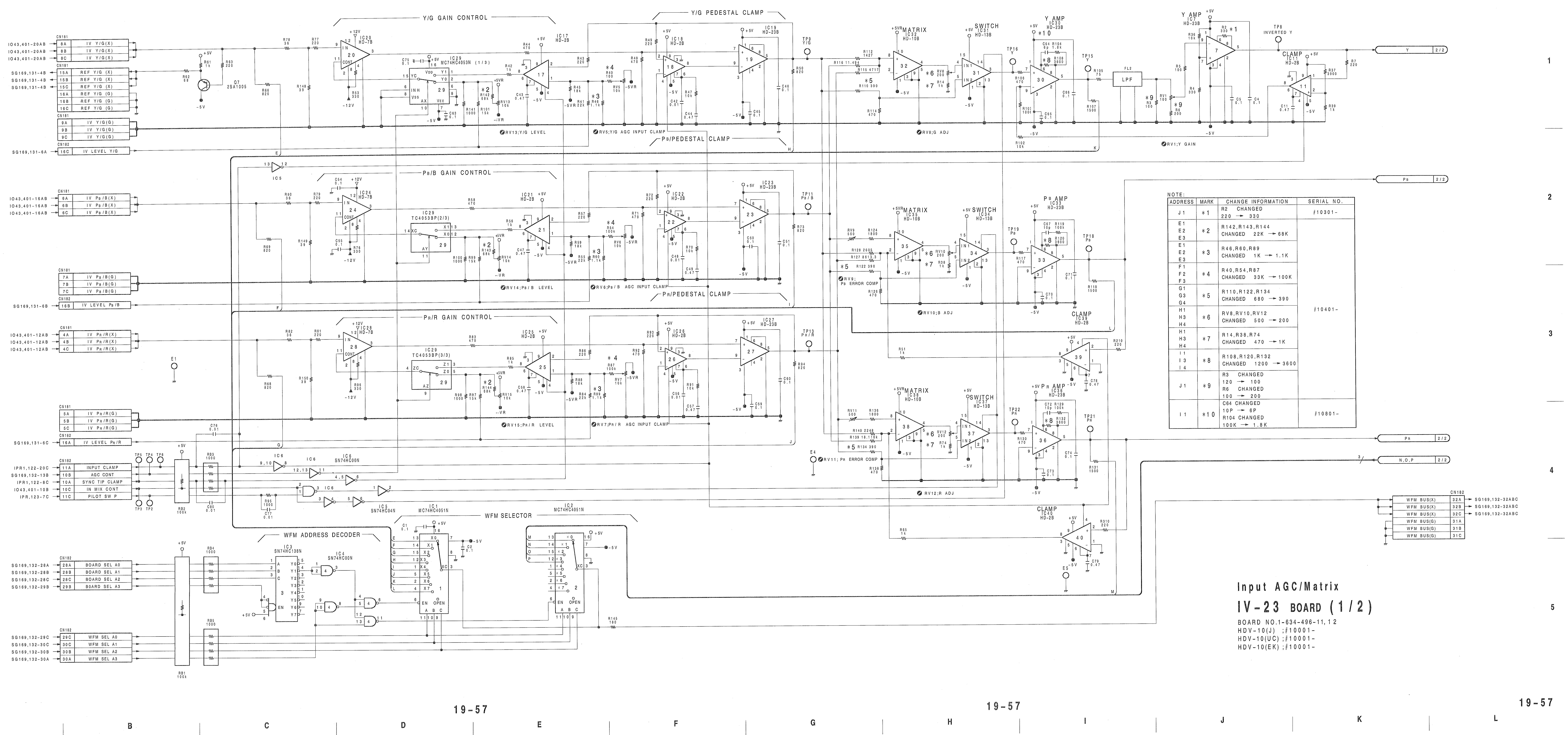
Y/G GAIN CONTROL
Y/G PEDESTAL CLAMP
PB/PEDESTAL CLAMP
PR/PEDESTAL CLAMP
PB/B GAIN CONTROL
PR/R GAIN CONTROL
MATRIX
SWITCH
Y AMP
PB AMP
PR AMP
CLAMP
LPF
WFM SELECTOR
WFM ADDRESS DECODER
IC29 MC74HC4053N (1/3)
IC29 TC4053BP(2/3)
IC29 TC4053BP(3/3)
IC3 SN74HC138N
IC4 SN74HC00N
IC5 SN74HC04N
IC6 SN74HC00N
IC1 MC74HC4051N
IC2 MC74HC4051N
Q7 2SA1005
RV13;Y/G LEVEL
RV5;Y/G AGC INPUT CLAMP
RV8;G ADJ
RV1;Y GAIN
RV14;PB/B LEVEL
RV6;PB/B AGC INPUT CLAMP
RV10;B ADJ
RV9; PB ERROR COMP
RV15;PR/R LEVEL
RV7;PR/R AGC INPUT CLAMP
RV11;PR ERROR COMP
RV12;R ADJ
TP8 INVERTED Y
IO43,401-20AB
SG169,131-4B
SG169,131-6A
IO43,401-16AB
SG169,131-6B
IO43,401-12AB
SG169,131-6C
IPR1,122-20C
SG169,131-13B
IPR1,122-8C
IO43,401-10B
IPR,123-7C
SG169,132-28A
SG169,132-28B
SG169,132-28C
SG169,132-29B
SG169,132-29C
SG169,132-30C
SG169,132-30B
SG169,132-30A
IV Y/G(X)
REF Y/G (X)
REF Y/G (G)
IV Y/G(G)
IV LEVEL Y/G
IV PB/B(X)
IV PB/B(G)
IV LEVEL PB/B
IV PR/R(X)
IV PR/R(G)
IV LEVEL PR/R
INPUT CLAMP
AGC CONT
SYNC TIP CLAMP
IN MIX CONT
PILOT SW P
BOARD SEL A0
BOARD SEL A1
BOARD SEL A2
BOARD SEL A3
WFM SEL A0
WFM SEL A1
WFM SEL A2
WFM SEL A3
Y 2/2
PB 2/2
PR 2/2
N.O.P 2/2
WFM BUS(X)
WFM BUS(G)
SG169,132-32ABC
1
2
3
4
5
A
B
C
D
E
F
G
H
I
J
K
L

NOTE:

ADDRESS	MARK	CHANGE INFORMATION	SERIAL NO.
J1	*1	R2 CHANGED 220 → 330	#10301-
E1 E2 E3	*2	R142,R143,R144 CHANGED 22K → 68K	#10401-
E1 E2 E3	*3	R46,R60,R89 CHANGED 1K → 1.1K	
F1 F2 F3	*4	R40,R54,R87 CHANGED 33K → 100K	
G1 G3 G4	*5	R110,R122,R134 CHANGED 680 → 390	
H1 H3 H4	*6	RV8,RV10,RV12 CHANGED 500 → 200	
H1 H3 H4	*7	R14,R38,R74 CHANGED 470 → 1K	
I1 I3 I4	*8	R108,R120,R132 CHANGED 1200 → 3600	
J1	*9	R3 CHANGED 120 → 100 R6 CHANGED 100 → 200	
I1	*10	C64 CHANGED 10P → 6P R104 CHANGED 100K → 1.8K	#10801-

Input AGC/Matrix

IV-23 BOARD (1/2)

BOARD NO.1-634-496-11,12
HDV-10(J) ;#10001-
HDV-10(UC) ;#10001-
HDV-10(EK) ;#10001-

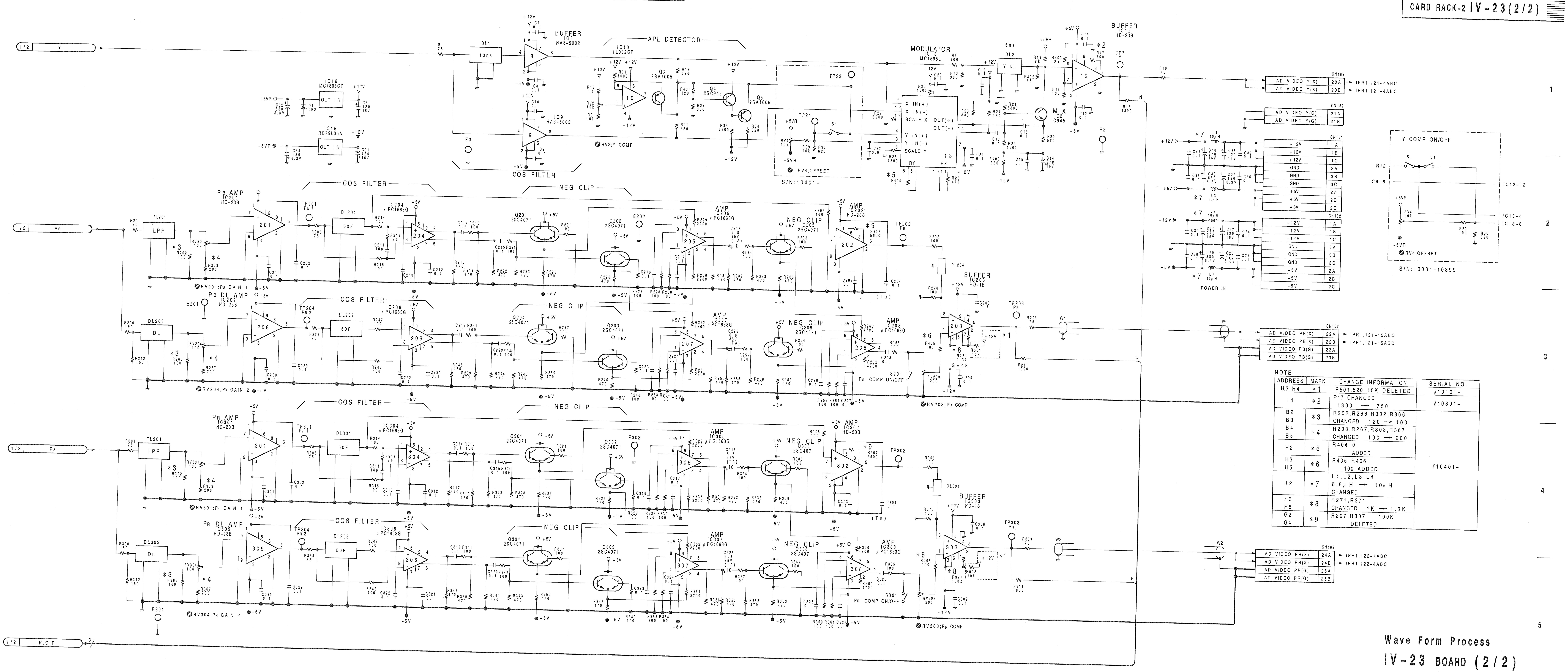
1/2 Y
1/2 PB
1/2 PR
1/2 N,O,P
DL1 10ns
BUFFER IC8 HA3-5002
IC9 HA3-5002
COS FILTER
APL DETECTOR
IC10 TL082CP
Q3 2SA1005
Q4 2SC945
Q5 2SA1005
IC16 MC7805CT
IC15 RC79L05A
TP23
TP24
RV2;Y COMP
RV4;OFFSET
S/N:10401-
MODULATOR IC13 MC1595L
DL2 Y DL
MIX Q2 2SC945
BUFFER IC12 HD-23B
TP7 Y
E2
E3
CN182
AD VIDEO Y(X) 20A IPR1,121-4ABC
AD VIDEO Y(X) 20B IPR1,121-4ABC
AD VIDEO Y(G) 21A
AD VIDEO Y(G) 21B
CN181
+12V 1A
+12V 1B
+12V 1C
GND 3A
GND 3B
GND 3C
+5V 2A
+5V 2B
+5V 2C
-12V 1A
-12V 1B
-12V 1C
GND 3A
GND 3B
GND 3C
-5V 2A
-5V 2B
-5V 2C
POWER IN
Y COMP ON/OFF
R12
IC9-8
IC13-12
IC13-4
IC13-8
RV4;OFFSET
S/N:10001-10399
PB AMP IC201 HD-23B
FL201 LPF
TP201 PB1
DL201 50F
IC204 μPC1663G
NEG CLIP
Q201 2SC4071
Q202 2SC4071
E202
AMP IC205 μPC1663G
NEG CLIP Q205 2SC4071
AMP IC202 HD-23B
TP202 PB
DL204
BUFFER IC203 HD-18
RV201;PB GAIN 1
PB DL AMP IC209 HD-23B
E201
DL203 DL
TP204 PB2
DL202 50F
IC206 μPC1663G
Q204 2SC4071
Q203 2SC4071
AMP IC207 μPC1663G
Q206 2SC4071
AMP IC208 μPC1663G
RV204;PB GAIN 2
PB COMP ON/OFF
S201
RV203;PB COMP
TP203 PB
W1
AD VIDEO PB(X) 22A IPR1,121-15ABC
AD VIDEO PB(X) 22B IPR1,121-15ABC
AD VIDEO PB(G) 23A
AD VIDEO PB(G) 23B
PR AMP IC301 HD-23B
FL301 LPF
TP301 PR1
DL301 50F
IC304 μPC1663G
Q301 2SC4071
Q302 2SC4071
E302
AMP IC305 μPC1663G
NEG CLIP Q305 2SC4071
AMP IC302 HD-23B
TP302
DL304
BUFFER IC303 HD-18
RV301;PR GAIN 1
PR DL AMP IC309 HD-23B
DL303 DL
TP304 PR2
DL302 50F
IC306 μPC1663G
Q304 2SC4071
Q303 2SC4071
AMP IC307 μPC1663G
Q306 2SC4071
AMP IC308 μPC1663G
PR COMP ON/OFF
S301
RV303;PR COMP
RV304;PR GAIN 2
E301
TP303 PR
W2
AD VIDEO PR(X) 24A IPR1,122-4ABC
AD VIDEO PR(X) 24B IPR1,122-4ABC
AD VIDEO PR(G) 25A
AD VIDEO PR(G) 25B
1
2
3
4
5

NOTE:

ADDRESS	MARK	CHANGE INFORMATION	SERIAL NO.
H3,H4	*1	R501,520 15K DELETED	#10101-
I1	*2	R17 CHANGED 1300 → 750	#10301-
B2 B3	*3	R202,R266,R302,R366 CHANGED 120 → 100	#10401-
B4 B5	*4	R203,R267,R303,R367 CHANGED 100 → 200	
H2	*5	R404 0 ADDED	
H3 H5	*6	R405 R406 100 ADDED	
J2	*7	L1,L2,L3,L4 6.8μH → 10μH CHANGED	
H3 H5	*8	R271,R371 CHANGED 1K → 1.3K	
G2 G4	*9	R207,R307 100K DELETED	

Wave Form Process

IV-23 BOARD (2/2)

BOARD NO.1-634-496-11,12
HDV-10(J) ;#10001-
HDV-10(UC) ;#10001-
HDV-10(EK) ;#10001-

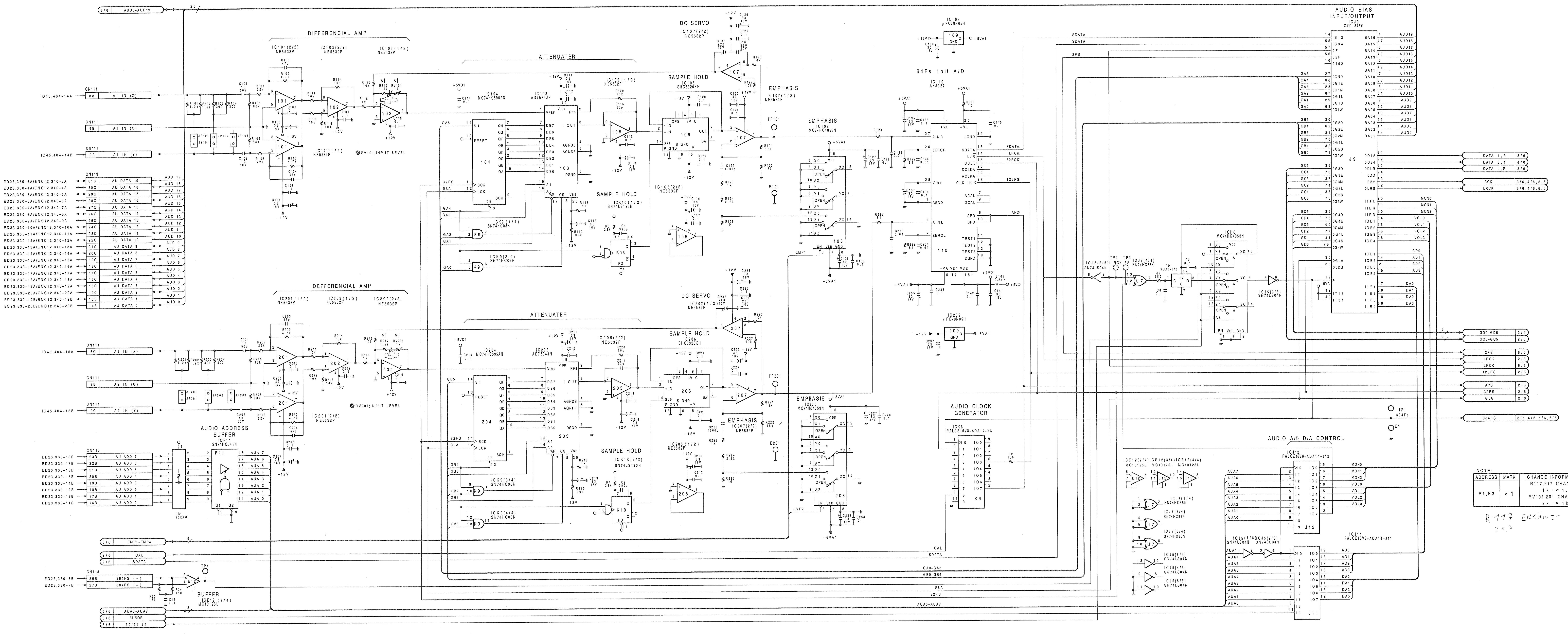
DIFFERENCIAL AMP
ATTENUATER
DC SERVO
SAMPLE HOLD
EMPHASIS
64Fs 1bit A/D
AUDIO BIAS INPUT/OUTPUT
DEFFERENCIAL AMP
AUDIO ADDRESS BUFFER
BUFFER
AUDIO CLOCK GENERATOR
AUDIO A/D D/A CONTROL
RV101:INPUT LEVEL
RV201:INPUT LEVEL
1
2
3
4
5

NOTE:

ADDRESS	MARK	CHANGE INFORMATION	SERIAL NO.
E1,E3	＊1	R117,217 CHANGED 1k → 1.5k RV101,201 CHANGED 2k → 1k	#10101-

R 117 ERGÄNZT AUF 4,5K FÜR +15dBu 0dBFs
217

Audio A/D Converter CH1/2

ADA-14 BOARD (1/6)

BOARD NO.1-634-490-11
HDV-10(J) ;#10001-
HDV-10(UC) ;#10001-
HDV-10(EK) ;#10001-

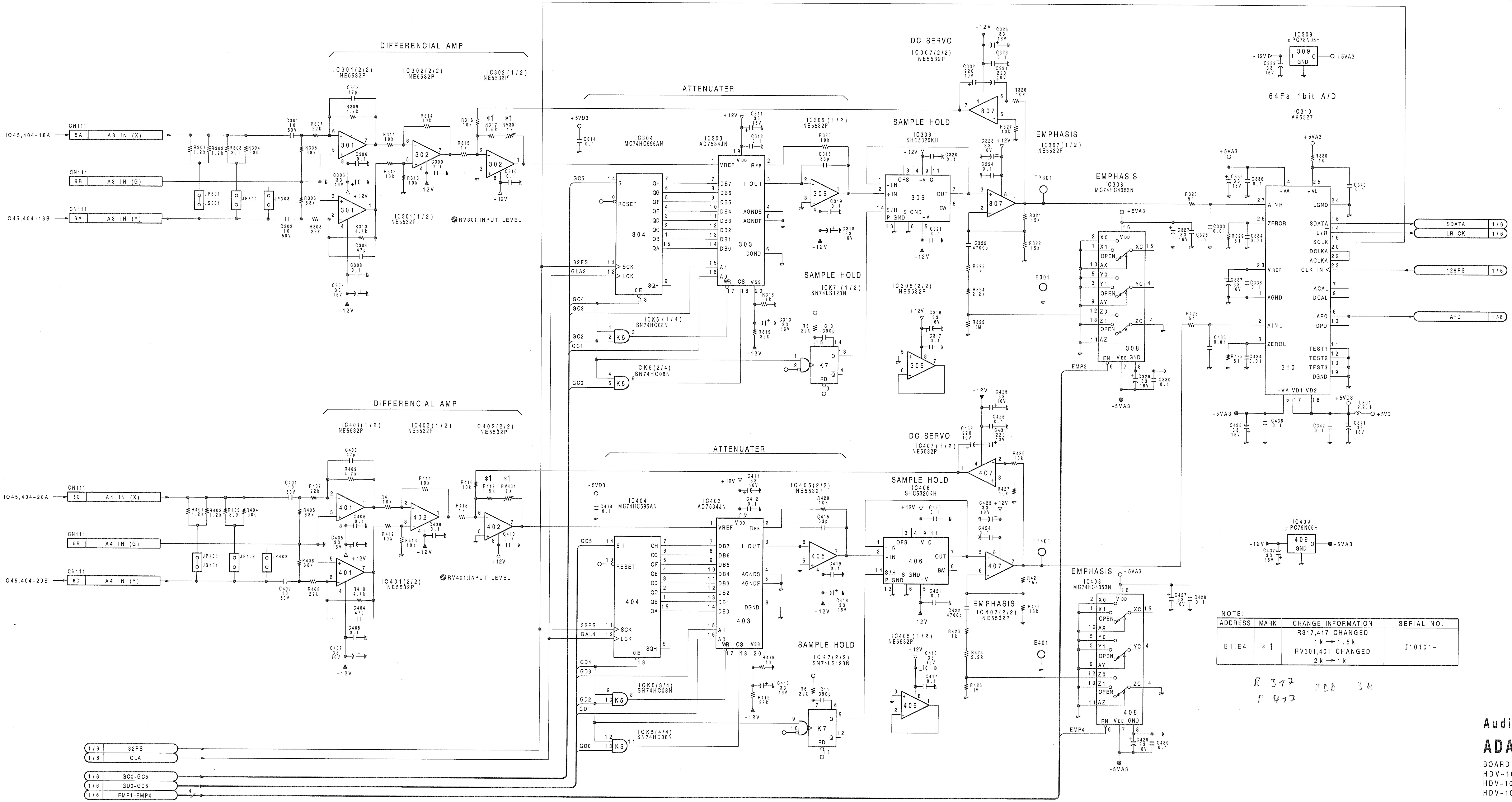
DIFFERENCIAL AMP
IC301(2/2) NE5532P
IC302(2/2) NE5532P
IC302(1/2) NE5532P
IC301(1/2) NE5532P
IO45,404-18A
IO45,404-18B
CN111
5A A3 IN (X)
6B A3 IN (G)
6A A3 IN (Y)
JP301
JS301
JP302
JP303
RV301;INPUT LEVEL
ATTENUATER
IC304 MC74HC595AN
IC303 AD7534JN
IC305(1/2) NE5532P
SAMPLE HOLD
IC306 SHC5320KH
DC SERVO
IC307(2/2) NE5532P
EMPHASIS
IC307(1/2) NE5532P
IC308 MC74HC4053N
TP301
E301
SAMPLE HOLD
ICK7(1/2) SN74LS123N
IC305(2/2) NE5532P
ICK5(1/4) SN74HC08N
ICK5(2/4) SN74HC08N
IC309 μPC78N05H
64Fs 1bit A/D
IC310 AK5327
SDATA
LR CK
128FS
APD
DIFFERENCIAL AMP
IC401(1/2) NE5532P
IC402(1/2) NE5532P
IC402(2/2) NE5532P
IC401(2/2) NE5532P
IO45,404-20A
IO45,404-20B
5C A4 IN (X)
5B A4 IN (G)
6C A4 IN (Y)
JP401
JS401
JP402
JP403
RV401;INPUT LEVEL
ATTENUATER
IC404 MC74HC595AN
IC403 AD7534JN
IC405(2/2) NE5532P
SAMPLE HOLD
IC406 SHC5320KH
DC SERVO
IC407(1/2) NE5532P
EMPHASIS
IC407(2/2) NE5532P
IC408 MC74HC4053N
TP401
E401
SAMPLE HOLD
ICK7(2/2) SN74LS123N
IC405(1/2) NE5532P
ICK5(3/4) SN74HC08N
ICK5(4/4) SN74HC08N
IC409 μPC79N05H
1/6 32FS
1/6 GLA
1/6 GC0-GC5
1/6 GD0-GD5
1/6 EMP1-EMP4
1
2
3
4
5
A
B
C
D
E
F
G
H
I
J
K
L

NOTE:

ADDRESS	MARK	CHANGE INFORMATION	SERIAL NO.
E1,E4	＊1	R317,417 CHANGED 1 k → 1.5 k RV301,401 CHANGED 2 k → 1 k	#10101-

R 317 ADD 3k
r 417

Audio A/D Converter CH3/4

ADA-14 BOARD (2/6)

BOARD NO.1-634-490-11
HDV-10(J) ;#10001-
HDV-10(UC) ;#10001-
HDV-10(EK) ;#10001-

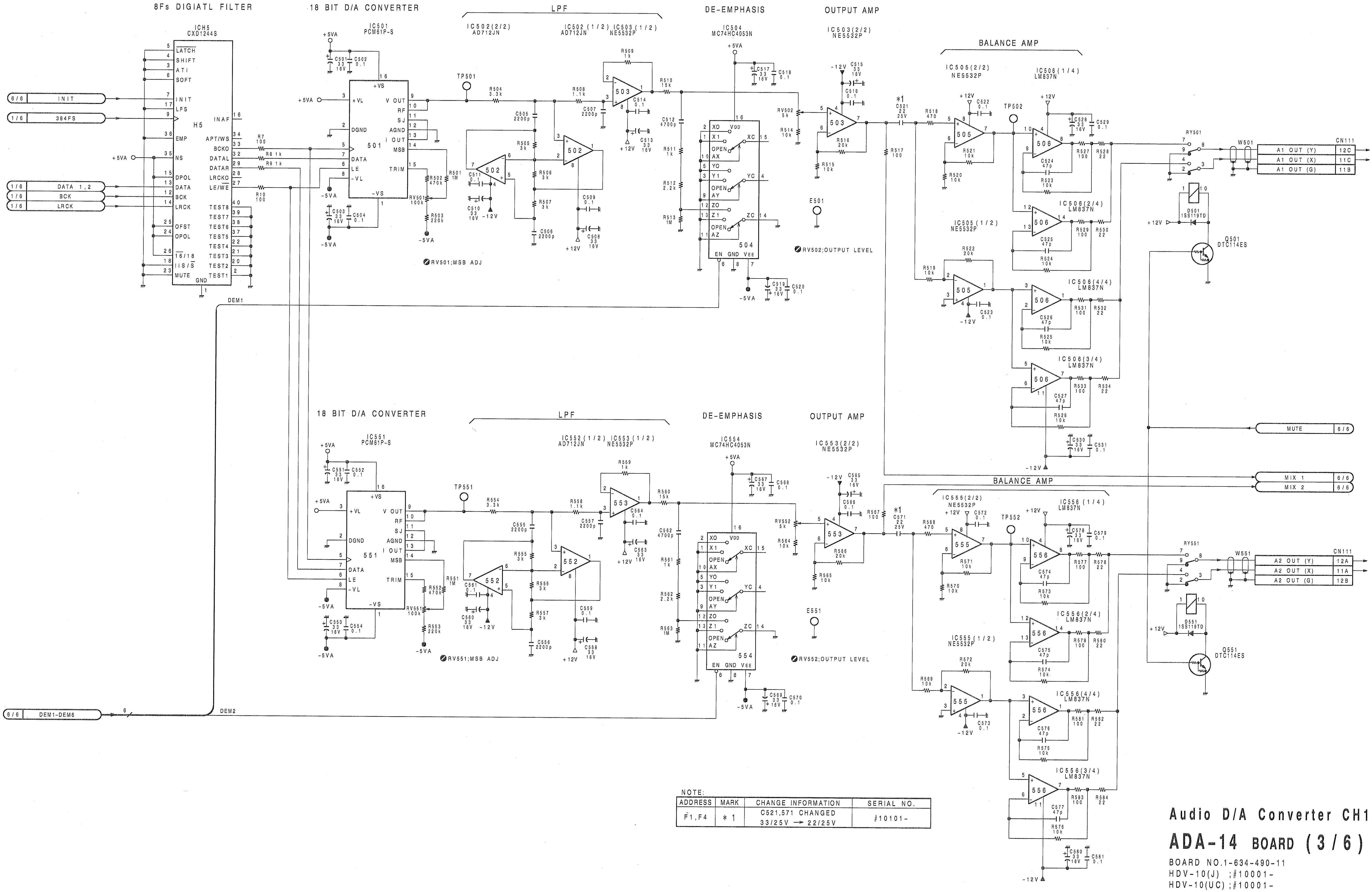
8Fs DIGIATL FILTER
IC H5
CXD1244S
18 BIT D/A CONVERTER
IC501
PCM61P-S
LPF
IC502(2/2)
AD712JN
IC502(1/2) IC503(1/2)
AD712JN NE5532P
DE-EMPHASIS
IC504
MC74HC4053N
OUTPUT AMP
IC503(2/2)
NE5532P
BALANCE AMP
IC505(2/2)
NE5532P
IC506(1/4)
LM837N
IC505(1/2)
NE5532P
IC506(2/4)
LM837N
IC506(4/4)
LM837N
IC506(3/4)
LM837N
TP501
TP502
E501
RV501;MSB ADJ
RV502;OUTPUT LEVEL
6/6 INIT
1/6 384FS
1/6 DATA 1,2
1/6 BCK
1/6 LRCK
+5VA
DEM1
RY501
W501
CN111
A1 OUT (Y) 12C
A1 OUT (X) 11C
A1 OUT (G) 11B
IO45, 404-11B
IO45, 404-11A
D501 1SS119TD
Q501 DTC114ES
MUTE 6/6
MIX 1 6/6
MIX 2 6/6
18 BIT D/A CONVERTER
IC551
PCM61P-S
LPF
IC552(1/2) IC553(1/2)
AD712JN NE5532P
DE-EMPHASIS
IC554
MC74HC4053N
OUTPUT AMP
IC553(2/2)
NE5532P
BALANCE AMP
IC555(2/2)
NE5532P
IC556(1/4)
LM837N
IC555(1/2)
NE5532P
IC556(2/4)
LM837N
IC556(4/4)
LM837N
IC556(3/4)
LM837N
TP551
TP552
E551
RV551;MSB ADJ
RV552;OUTPUT LEVEL
6/6 DEM1-DEM6
DEM2
RY551
W551
CN111
A2 OUT (Y) 12A
A2 OUT (X) 11A
A2 OUT (G) 12B
IO45, 404-9B
IO45, 404-9A
D551 1SS119TD
Q551 DTC114ES
*1
A B C D E F G H
1 2 3 4 5

NOTE:

ADDRESS	MARK	CHANGE INFORMATION	SERIAL NO.
F1,F4	*1	C521,571 CHANGED 33/25V → 22/25V	♯10101-

Audio D/A Converter CH1/2

ADA-14 BOARD (3/6)

BOARD NO.1-634-490-11
HDV-10(J) ;♯10001-
HDV-10(UC) ;♯10001-
HDV-10(EK) ;♯10001-

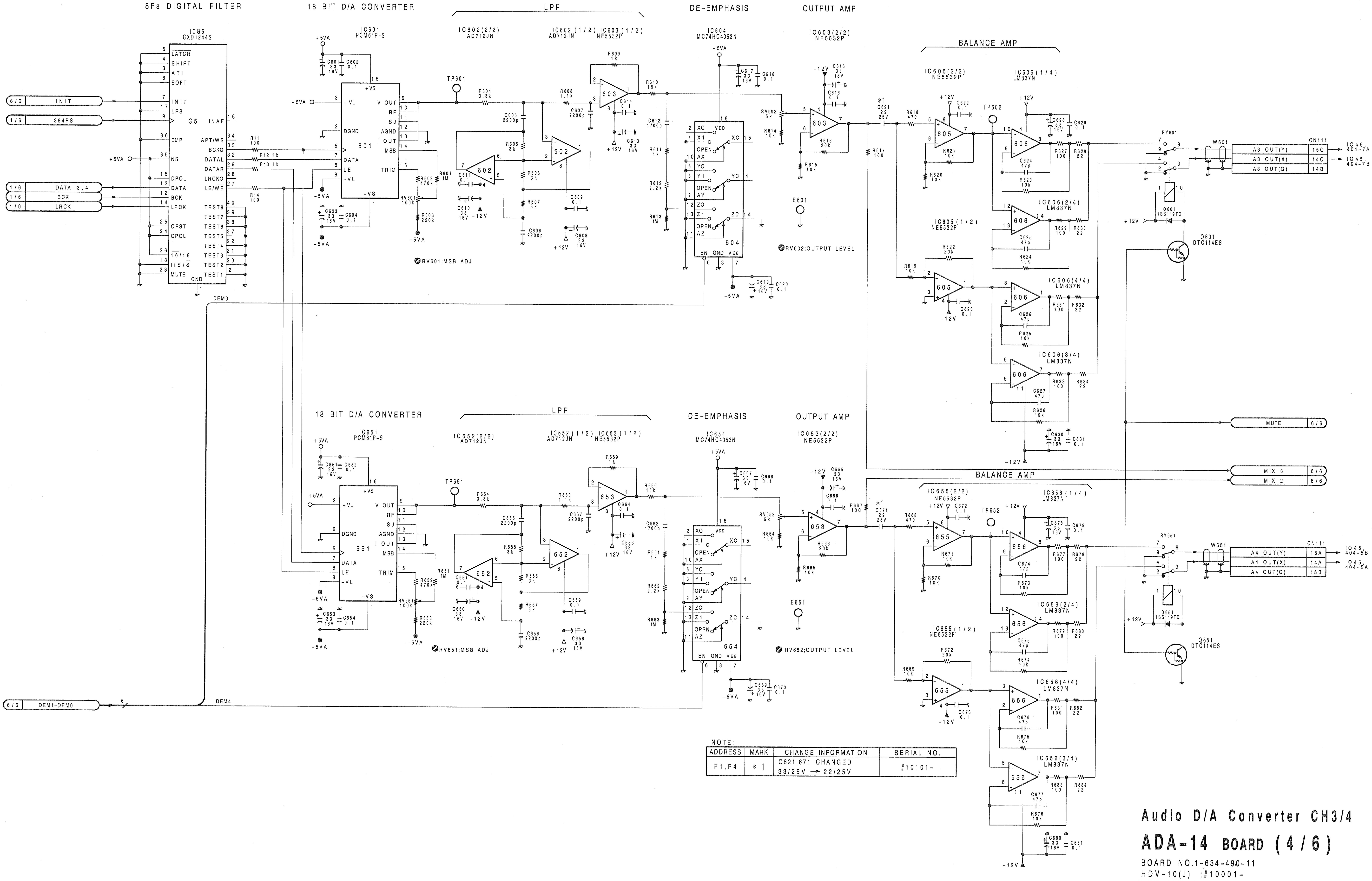
8Fs DIGITAL FILTER
IC G5 CXD1244S
18 BIT D/A CONVERTER
IC601 PCM61P-S
LPF
IC602(2/2) AD712JN
IC602(1/2) IC603(1/2) AD712JN NE5532P
DE-EMPHASIS
IC604 MC74HC4053N
OUTPUT AMP
IC603(2/2) NE5532P
BALANCE AMP
IC605(2/2) NE5532P
IC606(1/4) LM837N
IC605(1/2) NE5532P
IC606(2/4) LM837N
IC606(4/4) LM837N
IC606(3/4) LM837N
RV601;MSB ADJ
RV602;OUTPUT LEVEL
TP601
TP602
E601
RY601
W601
D601 1SS119TD
Q601 DTC114ES
CN111
A3 OUT(Y) 15C
A3 OUT(X) 14C
A3 OUT(G) 14B
IO45 404-7A
IO45 404-7B
6/6 INIT
1/6 384FS
1/6 DATA 3,4
1/6 BCK
1/6 LRCK
DEM3
MUTE 6/6
MIX 3 6/6
MIX 2 6/6
18 BIT D/A CONVERTER
IC651 PCM61P-S
LPF
IC652(2/2) AD712JN
IC652(1/2) IC653(1/2) AD712JN NE5532P
DE-EMPHASIS
IC654 MC74HC4053N
OUTPUT AMP
IC653(2/2) NE5532P
BALANCE AMP
IC655(2/2) NE5532P
IC656(1/4) LM837N
IC655(1/2) NE5532P
IC656(2/4) LM837N
IC656(4/4) LM837N
IC656(3/4) LM837N
RV651;MSB ADJ
RV652;OUTPUT LEVEL
TP651
TP652
E651
RY651
W651
D651 1SS119TD
Q651 DTC114ES
CN111
A4 OUT(Y) 15A
A4 OUT(X) 14A
A4 OUT(G) 15B
IO45 404-5B
IO45 404-5A
6/6 DEM1-DEM6
DEM4
*1
1
2
3
4
5
A
B
C
D
E
F
G
H

NOTE:

ADDRESS	MARK	CHANGE INFORMATION	SERIAL NO.
F1,F4	＊1	C621,671 CHANGED 33/25V → 22/25V	#10101-

Audio D/A Converter CH3/4

ADA-14 BOARD (4/6)

BOARD NO.1-634-490-11
HDV-10(J) ;#10001-
HDV-10(UC) ;#10001-
HDV-10(EK) ;#10001-

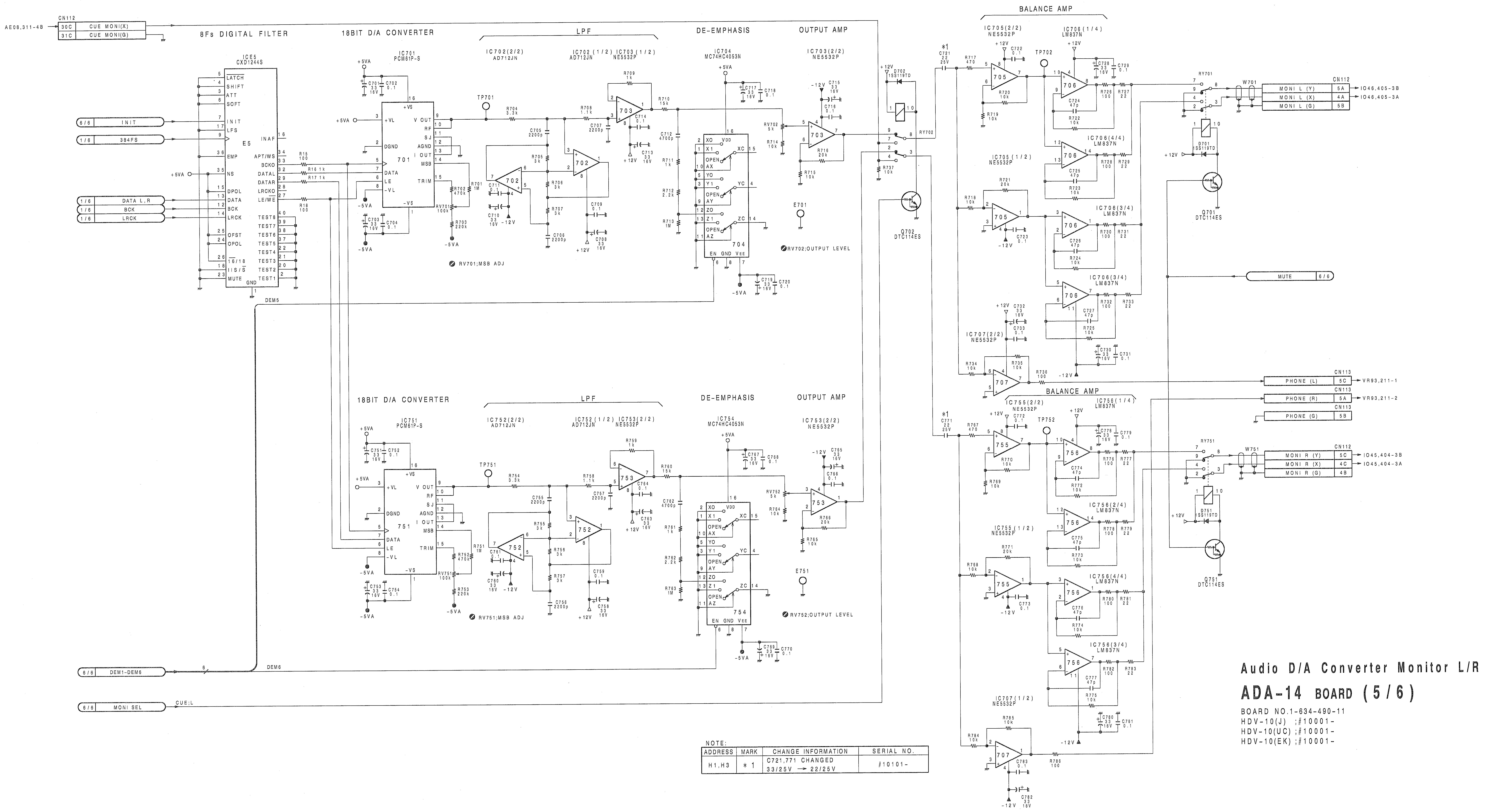
CN112
30C CUE MONI(X)
31C CUE MONI(G)
AE08,311-4B
8Fs DIGITAL FILTER
IC E5 CXD1244S
18BIT D/A CONVERTER
IC701 PCM61P-S
LPF
IC702(2/2) AD712JN
IC702(1/2) AD712JN IC703(1/2) NE5532P
DE-EMPHASIS
IC704 MC74HC4053N
OUTPUT AMP
IC703(2/2) NE5532P
BALANCE AMP
IC705(2/2) NE5532P
IC706(1/4) LM837N
IC705(1/2) NE5532P
IC706(4/4) LM837N
IC706(3/4) LM837N
IC707(2/2) NE5532P
TP701
TP702
RY701
RY702
W701
Q701 DTC114ES
Q702 DTC114ES
E701
INIT 6/6
384FS 1/6
DATA L,R 1/6
BCK 1/6
LRCK 1/6
MONI L (Y) 5A
MONI L (X) 4A
MONI L (G) 5B
IO46,405-3B
IO46,405-3A
MUTE 6/6
PHONE (L) 5C
PHONE (R) 5A
PHONE (G) 5B
CN113
VR93,211-1
VR93,211-2
RV701;MSB ADJ
RV702;OUTPUT LEVEL
DEM5
18BIT D/A CONVERTER
IC751 PCM61P-S
LPF
IC752(2/2) AD712JN
IC752(1/2) AD712JN IC753(2/2) NE5532P
DE-EMPHASIS
IC754 MC74HC4053N
OUTPUT AMP
IC753(2/2) NE5532P
BALANCE AMP
IC755(2/2) NE5532P
IC756(1/4) LM837N
IC755(1/2) NE5532P
IC756(2/4) LM837N
IC756(4/4) LM837N
IC756(3/4) LM837N
IC707(1/2) NE5532P
TP751
TP752
RY751
W751
Q751 DTC114ES
E751
MONI R (Y) 5C
MONI R (X) 4C
MONI R (G) 4B
IO45,404-3B
IO45,404-3A
RV751;MSB ADJ
RV752;OUTPUT LEVEL
DEM1-DEM6 6/6
DEM6
MONI SEL 6/6
CUE:L
*1
+12V
-12V
+5VA
-5VA
1
2
3
4
5
A
B
C
D
E
F
G
H
I
J
K
L

Audio D/A Converter Monitor L/R

ADA-14 BOARD (5/6)

BOARD NO.1-634-490-11
HDV-10(J) ;#10001-
HDV-10(UC) ;#10001-
HDV-10(EK) ;#10001-

NOTE:

ADDRESS	MARK	CHANGE INFORMATION	SERIAL NO.
H1,H3	＊1	C721,771 CHANGED 33/25V → 22/25V	#10101-

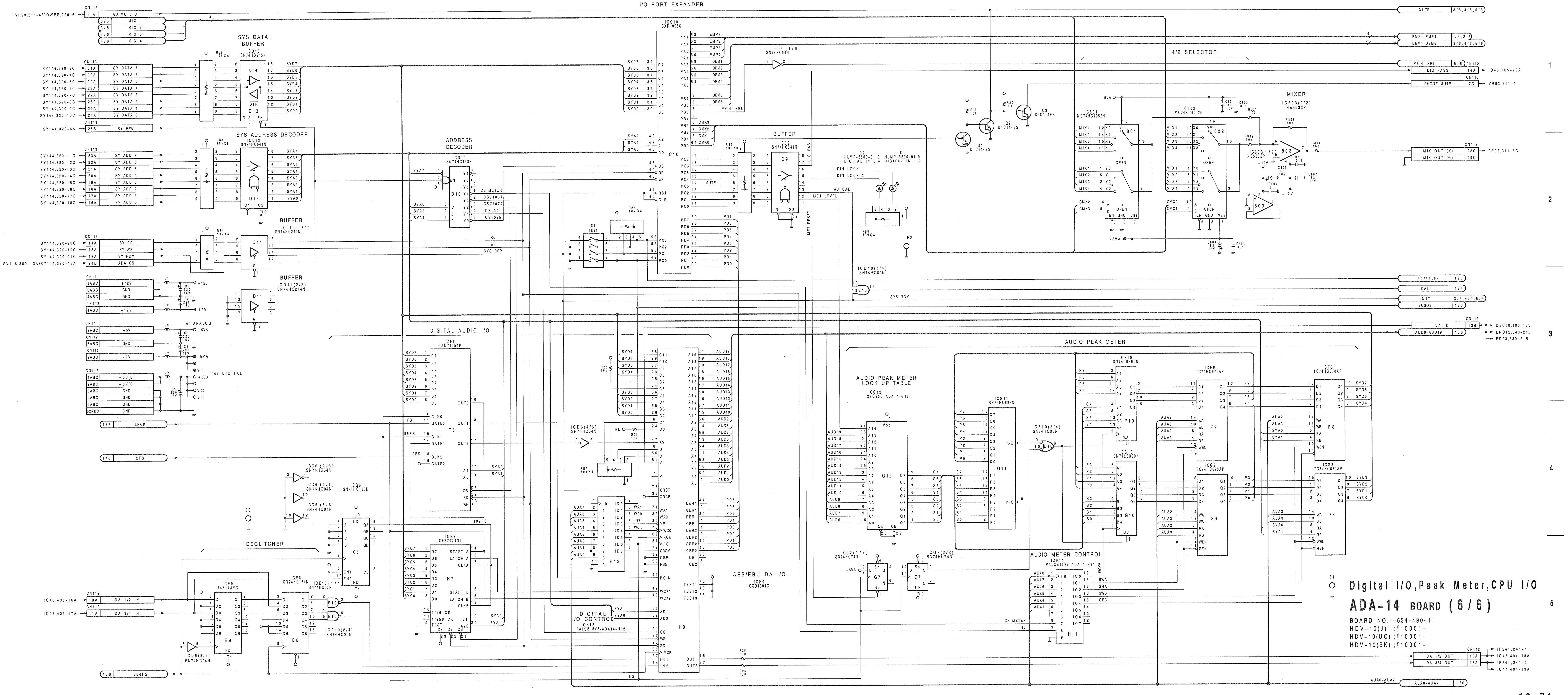
I/O PORT EXPANDER
IC C10 CXD1095Q
SYS DATA BUFFER
IC D13 SN74HC245N
SYS ADDRESS DECODER
IC D12 SN74HC541N
ADDRESS DECODER
IC D10 SN74HC138N
BUFFER
IC D11(1/2) SN74HC244N
BUFFER
IC D11(2/2) SN74HC244N
BUFFER
IC D9 SN74HC541N
IC D6(1/6) SN74HC04N
4/2 SELECTOR
IC 801 MC74HC4052N
IC 802 MC74HC4052N
MIXER
IC 803(2/2) NE5532P
IC 803(1/2) NE5532P
Q1 DTC114ES
Q2 DTC114ES
Q3 DTC114ES
D2 HLMP-6500-010 DIGITAL IN 3,4
D1 HLMP-6500-010 DIGITAL IN 1,2
DIN LOCK 1
DIN LOCK 2
AD CAL
MET LEVEL
MUTE
MONI SEL
S1 TEST
DIGITAL AUDIO I/O
IC F6 CXD1054P
IC H7 CF77074NT
DEGLITCHER
IC E9 74F174PC
IC E8 SN74HC174N
IC G6 SN74HC163N
IC E10(1/4) SN74HC00N
IC E10(2/4) SN74HC00N
IC D6(2/6) SN74HC04N
IC D6(3/6) SN74HC04N
IC D6(4/6) SN74HC04N
IC D6(5/6) SN74HC04N
IC D6(6/6) SN74HC04N
DIGITAL I/O CONTROL
IC H12 PALCE16V8-ADA14-H12
AES/EBU DA I/O
IC H9 CXD1061Q
AUDIO PEAK METER
AUDIO PEAK METER LOOK UP TABLE
IC G12 27C256-ADA14-G12
IC G11 SN74HC682N
IC E10(3/4) SN74HC00N
IC E10(4/4) SN74HC00N
IC F10 SN74LS399N
IC G10 SN74LS399N
IC F9 TC74HC670AP
IC G9 TC74HC670AP
IC F8 TC74HC670AP
IC G8 TC74HC670AP
IC G7(1/2) SN74HC74N
IC G7(2/2) SN74HC74N
AUDIO METER CONTROL
IC H11 PALCE16V8-ADA14-H11
CN111
CN112
CN113
MUTE 3/6,4/6,5/6
EMP1-EMP4 1/6,2/6
DEM1-DEM4 3/6,4/6,5/6
MONI SEL 3/6
DIO PASS 14A IO46,405-20A
PHONE MUTE 7C VR93,211-4
MIX OUT (X) 28C
MIX OUT (G) 29C AE68,311-9C
60/59.94 1/6
CAL 1/6
INIT 3/6,4/6,5/6
BUSOE 1/6
VALID 13B DEC50,103-13B
AUD0-AUD19 1/6 ENC12,340-21B ED23,330-21B
DA 1/2 OUT 12A IF241,241-1 IO45,404-18A
DA 3/4 OUT 13A IF241,241-3 IO44,404-19A
AUA0-AUA7 1/6
DA 1/2 IN 10A IO46,405-16A
DA 3/4 IN 11A IO46,405-17A
LRCK 1/6
2FS 1/6
384FS 1/6
AU MUTE C 11A VR93,211-4/POWER,220-6
for ANALOG
for DIGITAL
+12V
-12V
+5VA
-5VA
+5VD
E2
E3
E4
1
2
3
4
5
A
B
C
D
E
F
G
H
I
J
K
L

Digital I/O,Peak Meter,CPU I/O

ADA-14 BOARD (6/6)

BOARD NO.1-634-490-11
HDV-10(J) ;#10001-
HDV-10(UC) ;#10001-
HDV-10(EK) ;#10001-

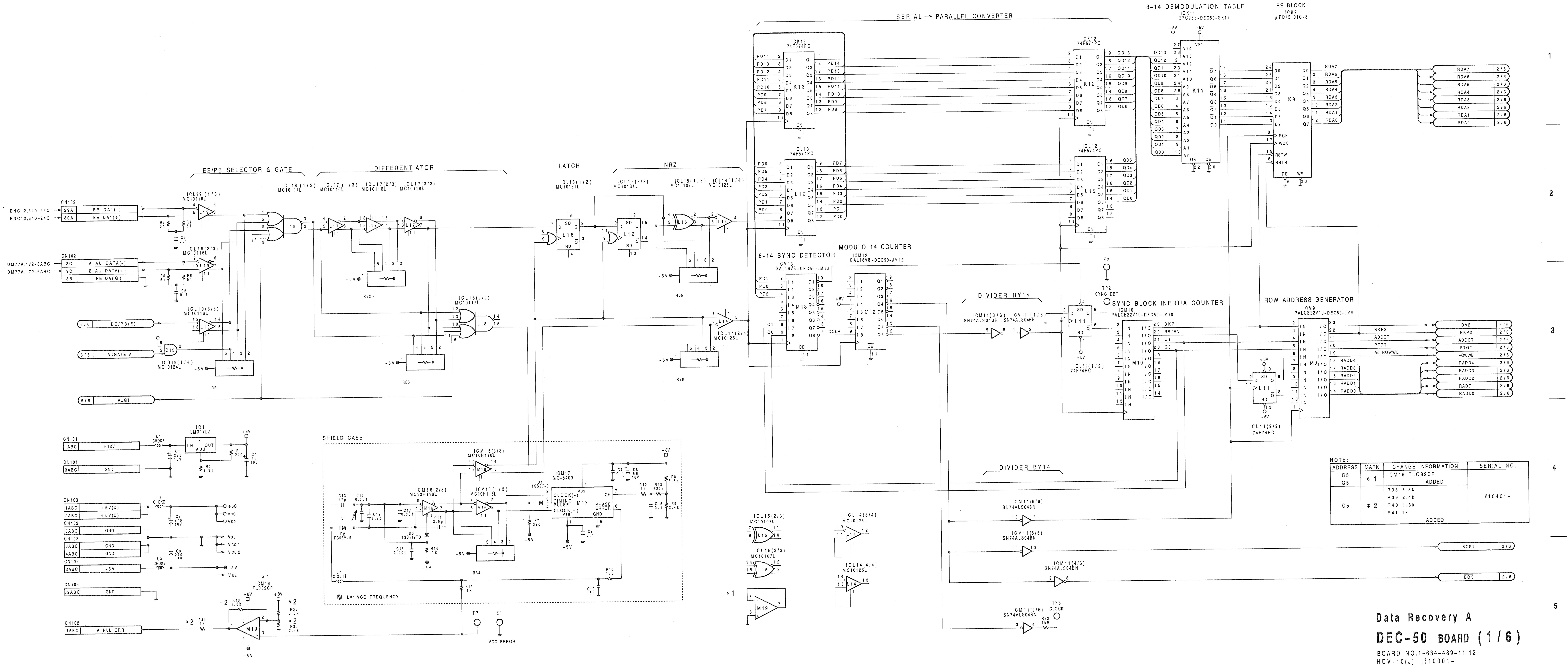
SERIAL → PARALLEL CONVERTER
8-14 DEMODULATION TABLE
ICK11 27C256-DEC50-GK11
RE-BLOCK
ICK9 μPD42101C-3
ICK13 74F574PC
ICK12 74F574PC
ICL13 74F574PC
ICL12 74F574PC
EE/PB SELECTOR & GATE
DIFFERENTIATOR
LATCH
NRZ
ICL19(1/3) MC10116L
ICL19(2/3) MC10116L
ICL19(3/3) MC10116L
ICL18(1/2) MC10117L
ICL17(1/3) MC10116L
ICL17(2/3) MC10116L
ICL17(3/3) MC10116L
ICL18(2/2) MC10117L
ICL16(1/2) MC10131L
ICL16(2/2) MC10131L
ICL15(1/3) MC10107L
ICL14(1/4) MC10125L
ICL14(2/4) MC10125L
ICG19(1/4) MC10124L
8-14 SYNC DETECTOR
ICM13 GAL16V8-DEC50-JM13
MODULO 14 COUNTER
ICM12 GAL16V8-DEC50-JM12
DIVIDER BY14
ICM11(3/6) SN74ALS04BN
ICM11(1/6) SN74ALS04BN
ICL11(1/2) 74F74PC
TP2 SYNC DET
E2
SYNC BLOCK INERTIA COUNTER
ICM10 PALCE22V10-DEC50-JM10
ROW ADDRESS GENERATOR
ICM9 PALCE22V10-DEC50-JM9
ICL11(2/2) 74F74PC
DIVIDER BY14
ICM11(6/6) SN74ALS04BN
ICM11(5/6) SN74ALS04BN
ICM11(4/6) SN74ALS04BN
ICM11(2/6) SN74ALS04BN
TP3 CLOCK
ICL15(2/3) MC10107L
ICL15(3/3) MC10107L
ICL14(3/4) MC10125L
ICL14(4/4) MC10125L
*1 M19
CN102
ENC12,340-25C
ENC12,340-24C
29A EE DA1(-)
30A EE DA1(+)
DM77A,172-8ABC
DM77A,172-6ABC
8C A AU DATA(-)
9C B AU DATA(+)
8B PB DA(G)
6/6 EE/PB(E)
6/6 AUGATE A
5/6 AUGT
RB1
RB2
RB3
RB5
RB6
RB4
CN101 1ABC +12V
CN101 3ABC GND
IC1 LM317LZ
+8V
CN103 1ABC +5V(D)
2ABC +5V(D)
CN102 3ABC GND
CN103 3ABC GND
4ABC GND
CN102 2ABC -5V
CN103 32ABC GND
CN102 15BC A PLL ERR
*1 ICM19 TL082CP
*2
SHIELD CASE
ICM16(3/3) MC10H116L
ICM16(2/3) MC10H116L
ICM16(1/3) MC10H116L
ICM17 MC-5400
CLOCK(-)
TIMING PULSE
CLOCK(+)
PHASE ERROR
LV1:VCO FREQUENCY
TP1
E1
VCO ERROR
RDA7 2/6
RDA6 2/6
RDA5 2/6
RDA4 2/6
RDA3 2/6
RDA2 2/6
RDA1 2/6
RDA0 2/6
DV2 2/6
BKP2 2/6
ADDGT 2/6
PTGT 2/6
ROWWE 2/6
RADD4 2/6
RADD3 2/6
RADD2 2/6
RADD1 2/6
RADD0 2/6
BCK1 2/6
BCK 2/6
1
2
3
4
5

NOTE:

ADDRESS	MARK	CHANGE INFORMATION	SERIAL NO.
C5 G5	*1	ICM19 TLO82CP ADDED	#10401-
C5	*2	R38 6.8k R39 2.4k R40 1.8k R41 1k ADDED	

Data Recovery A

DEC-50 BOARD (1/6)

BOARD NO.1-634-489-11,12
HDV-10(J) ;#10001-
HDV-10(UC) ;#10001-
HDV-10(EK) ;#10001-

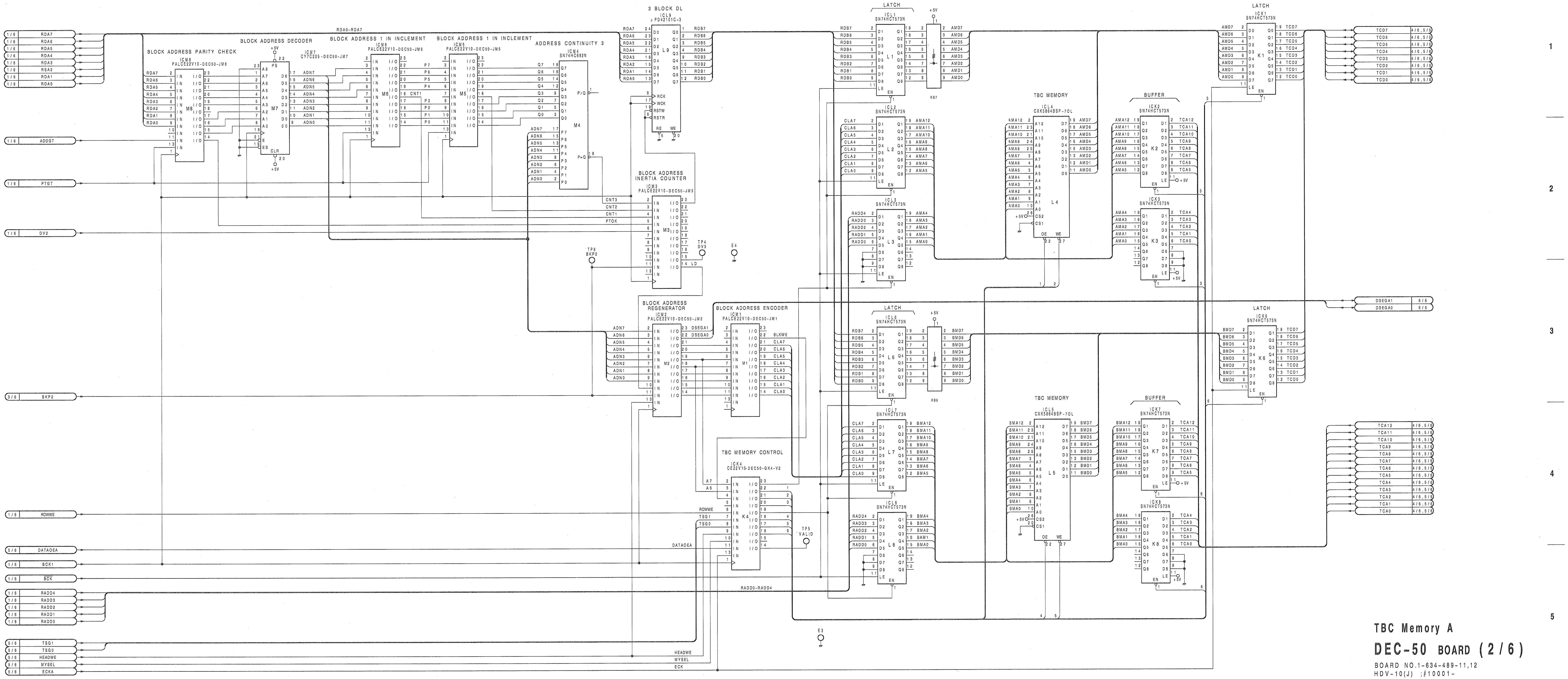
BLOCK ADDRESS PARITY CHECK
ICM8
PALCE22V10-DEC50-JM8
BLOCK ADDRESS DECODER
ICM7
CY7C225-DEC50-JM7
BLOCK ADDRESS 1 IN INCLEMENT
ICM6
PALCE22V10-DEC50-JM6
BLOCK ADDRESS 1 IN INCLEMENT
ICM5
PALCE22V10-DEC50-JM5
ADDRESS CONTINUITY 3
ICM4
SN74HC682N
3 BLOCK DL
ICL9
μPD42101C-3
BLOCK ADDRESS INERTIA COUNTER
ICM3
PALCE22V10-DEC50-JM3
BLOCK ADDRESS REGENERATOR
ICM2
PALCE22V10-DEC50-JM2
BLOCK ADDRESS ENCODER
ICM1
PALCE22V10-DEC50-JM1
TBC MEMORY CONTROL
ICK4
CE22V10-DEC50-GK4-V2
LATCH
ICL1
SN74HCT573N
ICL2
SN74HCT573N
ICL3
SN74HCT573N
TBC MEMORY
ICL4
CXK5864BSP-70L
BUFFER
ICK2
SN74HCT573N
ICK3
SN74HCT573N
LATCH
ICK1
SN74HCT573N
LATCH
ICL6
SN74HCT573N
ICL7
SN74HCT573N
ICL8
SN74HCT573N
TBC MEMORY
ICL5
CXK5864BSP-70L
BUFFER
ICK7
SN74HCT573N
ICK8
SN74HCT573N
LATCH
ICK6
SN74HCT573N
RB7
RB8
TP6 BKP2
TP4 DV3
TP5 VALID
E3
E4
RDA0-RDA7
RADD0-RADD4
1/6 RDA7
1/6 RDA6
1/6 RDA5
1/6 RDA4
1/6 RDA3
1/6 RDA2
1/6 RDA1
1/6 RDA0
1/6 ADDGT
1/6 PTGT
1/6 DV2
3/6 BKP2
1/6 ROWWE
5/6 DATAOEA
1/6 BCK1
1/6 BCK
1/6 RADD4
1/6 RADD3
1/6 RADD2
1/6 RADD1
1/6 RADD0
5/6 TSG1
5/6 TSG0
5/6 HEADWE
5/6 MYSEL
5/6 ECKA
TCD7 4/6,5/6
TCD6 4/6,5/6
TCD5 4/6,5/6
TCD4 4/6,5/6
TCD3 4/6,5/6
TCD2 4/6,5/6
TCD1 4/6,5/6
TCD0 4/6,5/6
DSEGA1 6/6
DSEGA0 6/6
TCA12 4/6,5/6
TCA11 4/6,5/6
TCA10 4/6,5/6
TCA9 4/6,5/6
TCA8 4/6,5/6
TCA7 4/6,5/6
TCA6 4/6,5/6
TCA5 4/6,5/6
TCA4 4/6,5/6
TCA3 4/6,5/6
TCA2 4/6,5/6
TCA1 4/6,5/6
TCA0 4/6,5/6
+5V
1
2
3
4
5

TBC Memory A

DEC-50 BOARD (2/6)

BOARD NO.1-634-489-11,12
HDV-10(J) ;#10001-
HDV-10(UC) ;#10001-
HDV-10(EK) ;#10001-

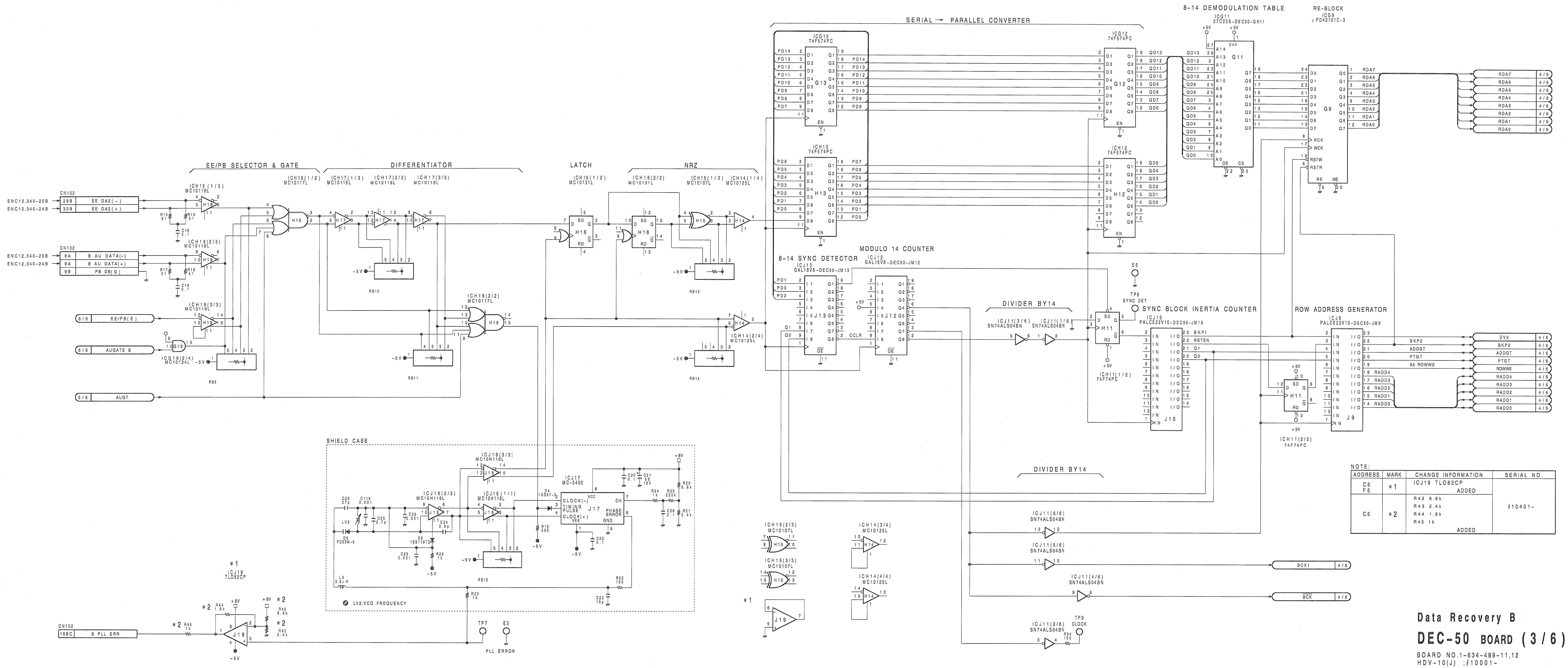

EE/PB SELECTOR & GATE
DIFFERENTIATOR
LATCH
NRZ
SERIAL → PARALLEL CONVERTER
8-14 DEMODULATION TABLE
RE-BLOCK
8-14 SYNC DETECTOR
MODULO 14 COUNTER
DIVIDER BY14
SYNC BLOCK INERTIA COUNTER
ROW ADDRESS GENERATOR
SHIELD CASE
LV2;VCO FREQUENCY
PLL ERROR
TP7
E5
E8
TP8 SYNC DET
TP9 CLOCK
CN102
ENC12,340-25B
ENC12,340-24B
EE DA2(-)
EE DA2(+)
B AU DATA(-)
B AU DATA(+)
PB DB(G)
EE/PB(E)
AUGATE B
AUGT
B PLL ERR
ICH19(1/3) MC10116L
ICH19(2/3) MC10116L
ICH19(3/3) MC10116L
ICG19(2/4) MC10124L
ICH18(1/2) MC10117L
ICH18(2/2) MC10117L
ICH17(1/3) MC10116L
ICH17(2/3) MC10116L
ICH17(3/3) MC10116L
ICH16(1/2) MC10131L
ICH16(2/2) MC10131L
ICH15(1/3) MC10107L
ICH14(1/4) MC10125L
ICH14(2/4) MC10125L
ICH15(2/3) MC10107L
ICH15(3/3) MC10107L
ICH14(3/4) MC10125L
ICH14(4/4) MC10125L
ICJ16(3/3) MC10H116L
ICJ16(2/3) MC10H116L
ICJ16(1/3) MC10H116L
ICJ17 MC-5400
ICJ19 TL082CP
ICG13 74F574PC
ICH13 74F574PC
ICG12 74F574PC
ICH12 74F574PC
ICG11 27C256-DEC50-GK11
ICG9 μPD42101C-3
ICJ13 GAL16V8-DEC50-JM13
ICJ12 GAL16V8-DEC50-JM12
ICJ11(3/6) SN74ALS04BN
ICJ11(1/6) SN74ALS04BN
ICJ11(6/6) SN74ALS04BN
ICJ11(5/6) SN74ALS04BN
ICJ11(4/6) SN74ALS04BN
ICJ11(2/6) SN74ALS04BN
ICH11(1/2) 74F74PC
ICH11(2/2) 74F74PC
ICJ10 PALCE22V10-DEC50-JM10
ICJ9 PALCE22V10-DEC50-JM9
RB9
RB10
RB11
RB12
RB13
RB14
RDA7
RDA6
RDA5
RDA4
RDA3
RDA2
RDA1
RDA0
DV2
BKP2
ADDGT
PTGT
ROWWE
RADD4
RADD3
RADD2
RADD1
RADD0
BCK1
BCK
4/6
5/6
6/6
*1
*2

NOTE:

ADDRESS	MARK	CHANGE INFORMATION	SERIAL NO.
C5 F5	*1	ICJ19 TLO82CP ADDED	#10401-
C5	*2	R42 6.8k R43 2.4k R44 1.8k R45 1k ADDED	

Data Recovery B

DEC-50 BOARD (3/6)

BOARD NO.1-634-489-11,12
HDV-10(J) ;#10001-
HDV-10(UC) ;#10001-
HDV-10(EK) ;#10001-

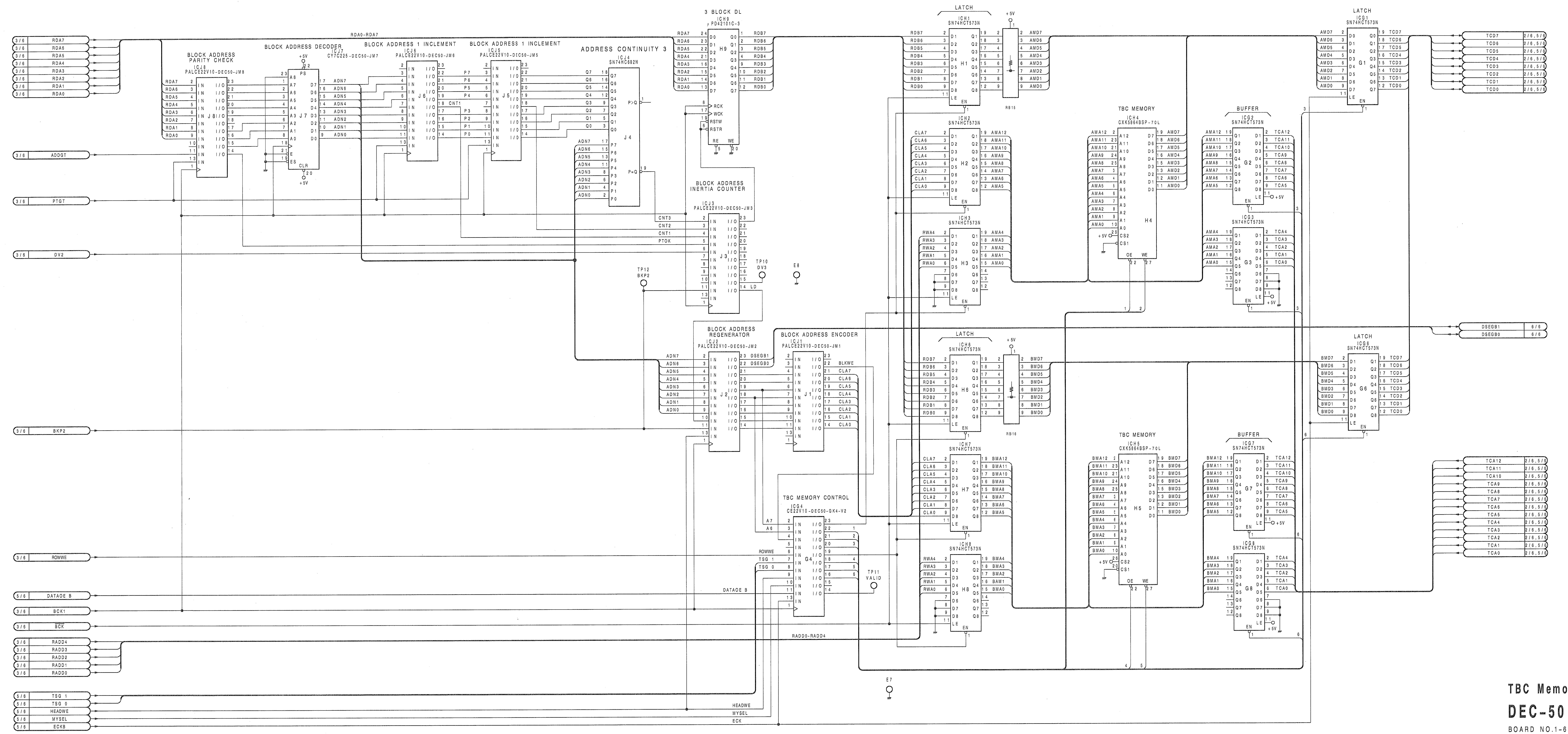
BLOCK ADDRESS PARITY CHECK
IC J8
PALCE22V10-DEC50-JM8
BLOCK ADDRESS DECODER
IC J7
CY7C225-DEC50-JM7
BLOCK ADDRESS 1 INCLEMENT
IC J6
PALCE22V10-DEC50-JM6
BLOCK ADDRESS 1 INCLEMENT
IC J5
PALCE22V10-DEC50-JM5
ADDRESS CONTINUITY 3
IC J4
SN74HC682N
3 BLOCK DL
IC H9
μPD42101C-3
BLOCK ADDRESS INERTIA COUNTER
IC J3
PALCE22V10-DEC50-JM3
BLOCK ADDRESS REGENERATOR
IC J2
PALCE22V10-DEC50-JM2
BLOCK ADDRESS ENCODER
IC J1
PALCE22V10-DEC50-JM1
TBC MEMORY CONTROL
IC G4
CE22V10-DEC50-GK4-V2
LATCH
IC H1
SN74HCT573N
IC H2
SN74HCT573N
IC H3
SN74HCT573N
TBC MEMORY
IC H4
CXK5864BSP-70L
BUFFER
IC G2
SN74HCT573N
IC G3
SN74HCT573N
LATCH
IC G1
SN74HCT573N
LATCH
IC H6
SN74HCT573N
IC H7
SN74HCT573N
IC H8
SN74HCT573N
TBC MEMORY
IC H5
CXK5864BSP-70L
BUFFER
IC G7
SN74HCT573N
IC G8
SN74HCT573N
LATCH
IC G6
SN74HCT573N
RB15
RB16
+5V
RDA0-RDA7
RDA7
RDA6
RDA5
RDA4
RDA3
RDA2
RDA1
RDA0
ADDGT
PTGT
DV2
BKP2
ROWWE
DATAOE B
BCK1
BCK
RADD4
RADD3
RADD2
RADD1
RADD0
RADD0-RADD4
TSG 1
TSG 0
HEADWE
MYSEL
ECKB
ECK
3/6
5/6
CNT3
CNT2
CNT1
PTOK
CNT1
TP12 BKP2
TP10 DV3
E8
TP11 VALID
E7
ADN7
ADN6
ADN5
ADN4
ADN3
ADN2
ADN1
ADN0
DSEGB1
DSEGB0
BLKWE
CLA7
CLA6
CLA5
CLA4
CLA3
CLA2
CLA1
CLA0
A7
A6
RDB7
RDB6
RDB5
RDB4
RDB3
RDB2
RDB1
RDB0
RCK
WCK
RSTW
RSTR
RE
WE
P=Q
P>Q
AMD7
AMD0
AMA12
AMA0
RWA4
RWA0
BMD7
BMD0
BMA12
BMA0
TCA12
TCA0
TCD7
TCD0
DSEGB1 6/6
DSEGB0 6/6
2/6,5/6
CS2
CS1
OE
WE
LE
EN
CLR
PS
1
2
3
4
5
A
B
C
D
E
F
G
H
I
J
K
L

TBC Memory B

DEC-50 BOARD (4/6)

BOARD NO.1-634-489-11,12
HDV-10(J) ;#10001-
HDV-10(UC) ;#10001-
HDV-10(EK) ;#10001-

TBC CONTROL
CLOCK GENERATOR
SAMPLE COUNTER
STEP COUNTER
DECODER SEQUENCE CONTROL
DATA OUTPUT CONTROL
DATA OUTPUT ADDRESS CONTROL
MODE COUNTER
DECODER BLOCK ADDRESS GENERATOR
DECODER ROW ADDRESS GENERATOR
DECODER SEQUENCE CONTROL
DECODER BLOCK ADDRESS GENERATOR
DECODER ROW ADDRESS GENERATOR
MAIN MEMORY
SUB MEMORY
LATCH
CORRECTION MODE
ECC TABLE
ECC
MUTING DETECTOR
ERROR FLAG DECODER
ERROR COUNTER CONTROL
AUDIO BUS OUTPUTS
AUDIO BUS OUTPUT CONTROL
FRAME
A/B HEAD
A
B
C
D
E
F
G
H
I
J
K
L
M
N
O
1
2
3
4
5

Error Correction

DEC-50 BOARD (5/6)

BOARD NO.1-634-489-11,12
HDV-10(J) ;#10001-
HDV-10(UC) ;#10001-
HDV-10(EK) ;#10001-

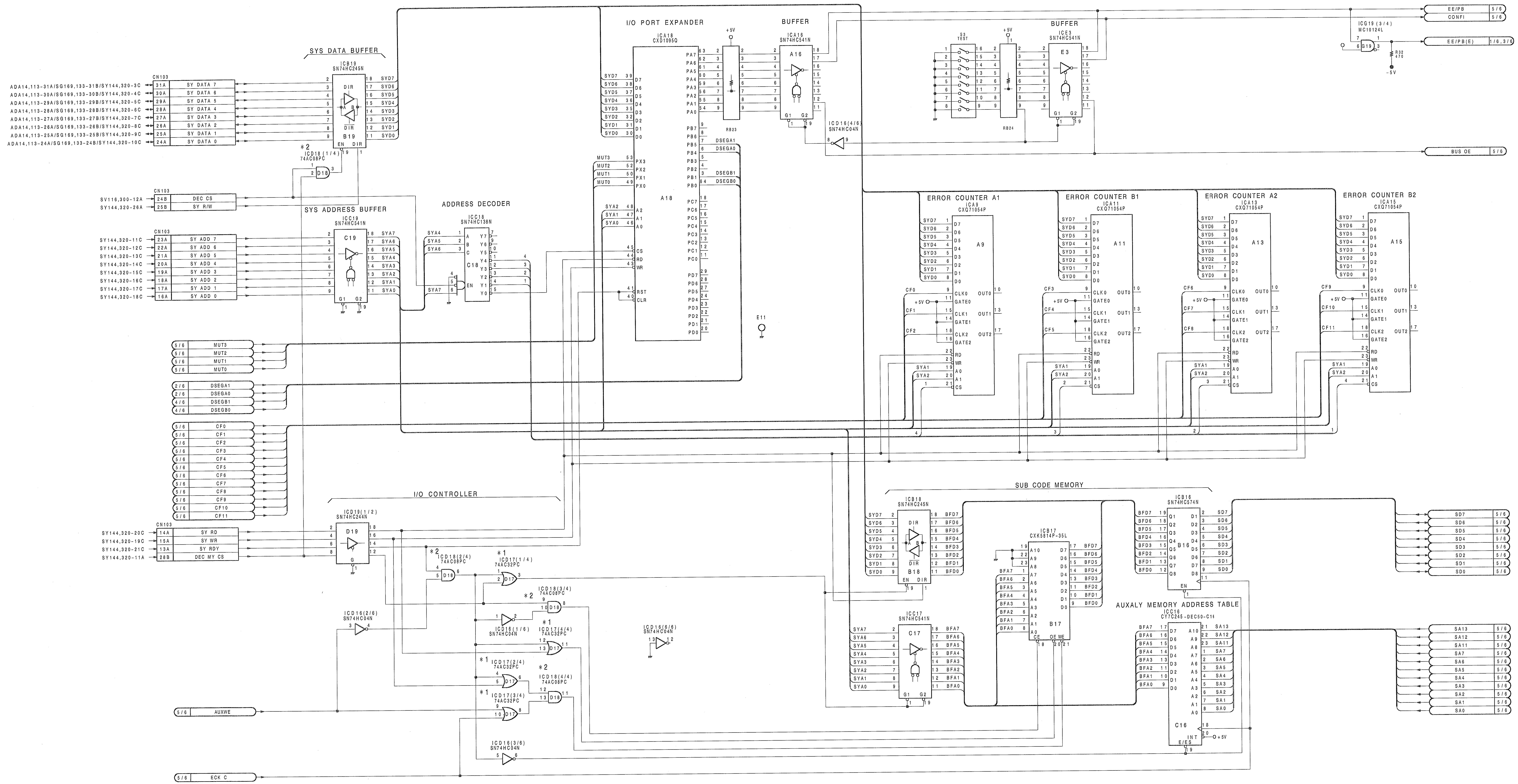
SYS DATA BUFFER
ICB19
SN74HC245N
B19
SYS ADDRESS BUFFER
ICC19
SN74HC541N
C19
ADDRESS DECODER
ICC18
SN74HC138N
C18
I/O PORT EXPANDER
ICA18
CXD1095Q
A18
BUFFER
ICA16
SN74HC541N
A16
BUFFER
ICE3
SN74HC541N
E3
S3
TEST
RB23
RB24
ICG19 (3/4)
MC10124L
ERROR COUNTER A1
ICA9
CXQ71054P
A9
ERROR COUNTER B1
ICA11
CXQ71054P
A11
ERROR COUNTER A2
ICA13
CXQ71054P
A13
ERROR COUNTER B2
ICA15
CXQ71054P
A15
I/O CONTROLLER
ICD19(1/2)
SN74HC244N
D19
SUB CODE MEMORY
ICB18
SN74HC245N
B18
ICB17
CXK5814P-35L
B17
ICB16
SN74HC574N
B16
ICC17
SN74HC541N
C17
AUXALY MEMORY ADDRESS TABLE
ICC16
CY7C245-DEC50-C16
C16
ICD18(1/4) 74AC08PC
ICD18(2/4) 74AC08PC
ICD18(3/4) 74AC08PC
ICD18(4/4) 74AC08PC
ICD17(1/4) 74AC32PC
ICD17(2/4) 74AC32PC
ICD17(3/4) 74AC32PC
ICD17(4/4) 74AC32PC
ICD16(1/6) SN74HC04N
ICD16(2/6) SN74HC04N
ICD16(3/6) SN74HC04N
ICD16(4/6) SN74HC04N
ICD16(6/6) SN74HC04N
CN103
E11
EE/PB
CONFI
EE/PB(E)
BUS OE
MUT0
MUT1
MUT2
MUT3
DSEGA0
DSEGA1
DSEGB0
DSEGB1
CF0
CF1
CF2
CF3
CF4
CF5
CF6
CF7
CF8
CF9
CF10
CF11
AUXWE
ECK C
SD0
SD1
SD2
SD3
SD4
SD5
SD6
SD7
SA0
SA1
SA2
SA3
SA4
SA5
SA6
SA7
SA11
SA12
SA13

NOTE;

ADDRESS	MARK	CHANGE INFORMATION	SERIAL NO.
D4,D5	＊1	ICD17 CHANGED SN74HC32N → 74AC32PC	#10401-
C2,D4, D5	＊2	ICD18 CHANGED SN74HC08N → 74AC08PC	

CPU Interface

DEC-50 BOARD (6/6)

BOARD NO.1-634-489-11,12
HDV-10(J) ;#10001-
HDV-10(UC) ;#10001-
HDV-10(EK) ;#10001-

1
2
3
4
5

A B C D E F G H I J K L

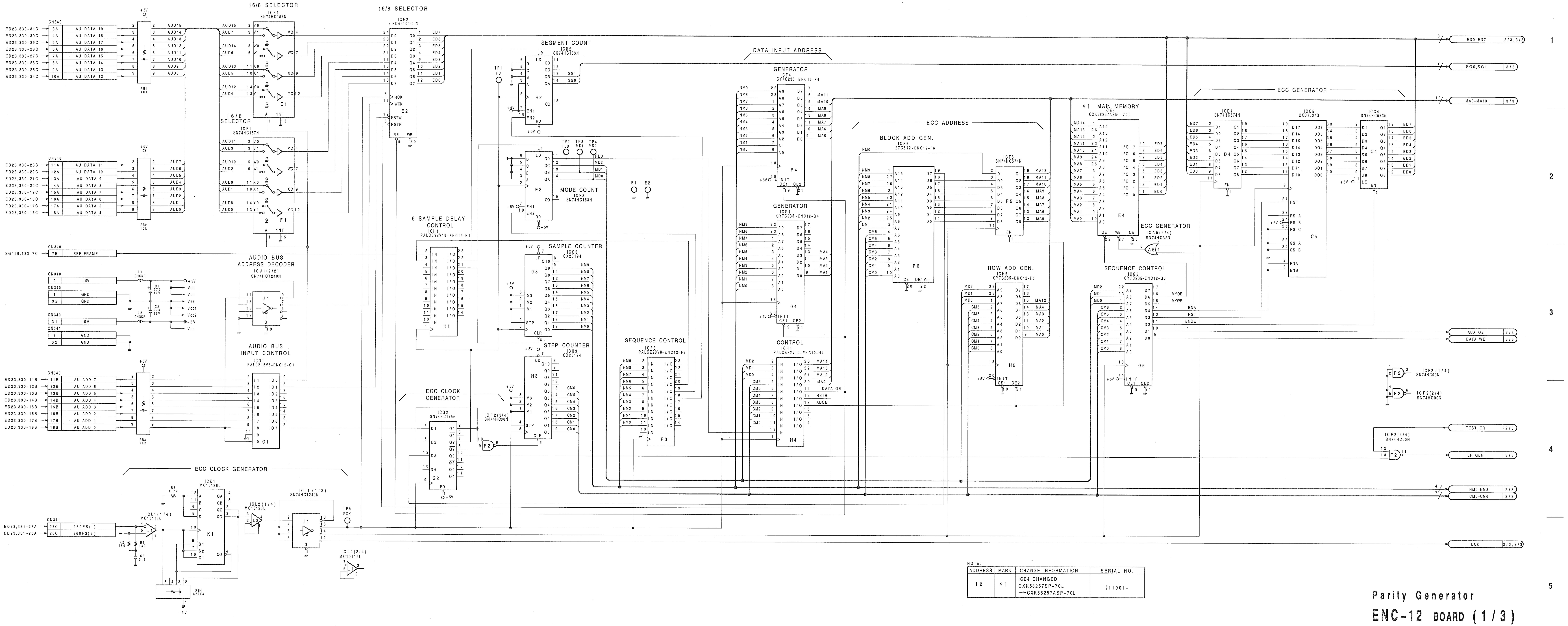
16/8 SELECTOR
ICE1 SN74HC157N
16/8 SELECTOR
ICF1 SN74HC157N
16/8 SELECTOR
ICE2 PD42101C-3
SEGMENT COUNT
ICH2 SN74HC163N
MODE COUNT
ICE3 SN74HC163N
DATA INPUT ADDRESS
GENERATOR
ICF4 CY7C235-ENC12-F4
GENERATOR
ICG4 CY7C235-ENC12-G4
CONTROL
ICH4 PALCE22V10-ENC12-H4
SEQUENCE CONTROL
ICF3 PALCE20V8-ENC12-F3
ECC ADDRESS
BLOCK ADD GEN.
ICF6 27C512-ENC12-F6
ICF5 SN74HC574N
ROW ADD GEN.
ICH5 CY7C235-ENC12-H5
*1 MAIN MEMORY
ICE4 CXK58257ASP-70L
ECC GENERATOR
ICD4 SN74HC574N
ICC5 CXD1037G
ICC4 SN74HC573N
ECC GENERATOR
ICA5(2/4) SN74HC32N
SEQUENCE CONTROL
ICG5 CY7C235-ENC12-G5
6 SAMPLE DELAY CONTROL
ICH1 PALCE22V10-ENC12-H1
SAMPLE COUNTER
ICG3 CX20194
STEP COUNTER
ICH3 CX20194
AUDIO BUS ADDRESS DECODER
ICJ1(2/2) SN74HCT240N
AUDIO BUS INPUT CONTROL
ICG1 PALCE16V8-ENC12-G1
ECC CLOCK GENERATOR
ICG2 SN74HC175N
ICF2(3/4) SN74HC00N
ECC CLOCK GENERATOR
ICK1 MC10136L
ICL1(1/4) MC10115L
ICL2(1/4) MC10125L
ICJ1(1/2) SN74HCT240N
ICL1(2/4) MC10115L
ICF2(1/4) SN74HC00N
ICF2(2/4) SN74HC00N
ICF2(4/4) SN74HC00N
CN340
CN341
ED23,330-31C AU DATA 19
ED23,330-30C AU DATA 18
ED23,330-29C AU DATA 17
ED23,330-28C AU DATA 16
ED23,330-27C AU DATA 15
ED23,330-26C AU DATA 14
ED23,330-25C AU DATA 13
ED23,330-24C AU DATA 12
ED23,330-23C AU DATA 11
ED23,330-22C AU DATA 10
ED23,330-21C AU DATA 9
ED23,330-20C AU DATA 8
ED23,330-19C AU DATA 7
ED23,330-18C AU DATA 6
ED23,330-17C AU DATA 5
ED23,330-16C AU DATA 4
SG169,133-7C REF FRAME
+5V
GND
-5V
ED23,330-11B AU ADD 7
ED23,330-12B AU ADD 6
ED23,330-13B AU ADD 5
ED23,330-14B AU ADD 4
ED23,330-15B AU ADD 3
ED23,330-16B AU ADD 2
ED23,330-17B AU ADD 1
ED23,330-18B AU ADD 0
ED23,331-27A 960FS(-)
ED23,331-26A 960FS(+)
RB1 10k
RB2 10k
RB3 10k
RB4 620X4
L1 CHOKE
L2 CHOKE
TP1 FS
TP2 FLD
TP3 MD1
TP4 MD0
TP5 ECK
ED0-ED7 2/3,3/3
SG0,SG1 3/3
MA0-MA13 3/3
AUX OE 2/3
DATA WE 3/3
TEST ER 2/3
ER GEN 3/3
NM0-NM3 2/3
CM0-CM6 2/3
ECK 2/3,3/3
1
2
3
4
5
A
B
C
D
E
F
G
H
I
J
K
L

NOTE:

ADDRESS	MARK	CHANGE INFORMATION	SERIAL NO.
I 2	*1	ICE4 CHANGED CXK58257SP-70L →CXK58257ASP-70L	#11001-

Parity Generator

ENC-12 BOARD (1/3)

BOARD NO.1-634-503-11
HDV-10(J) ;#10001-
HDV-10(UC) ;#10001-
HDV-10(EK) ;#10001-

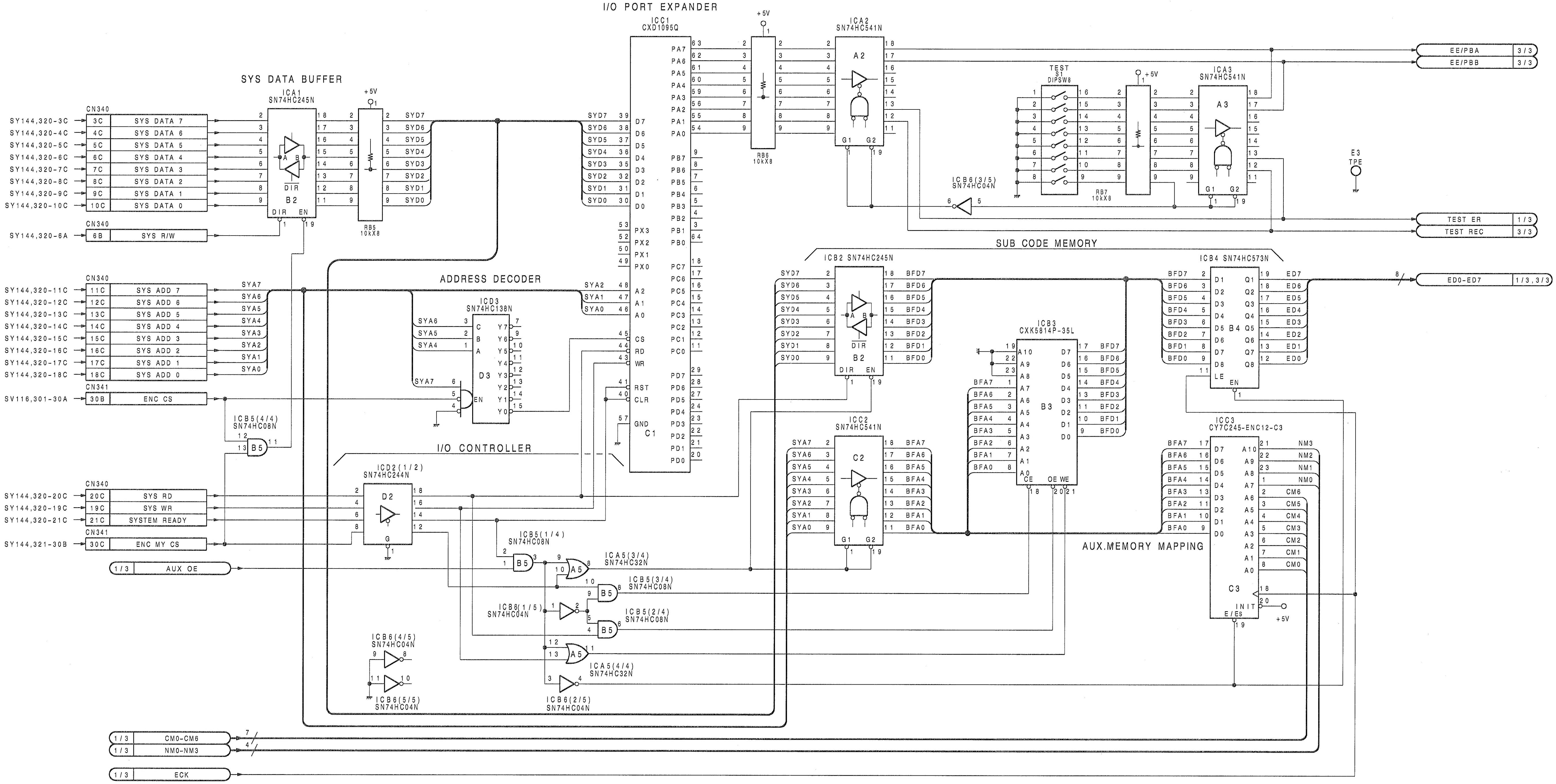
SYS DATA BUFFER
ICA1 SN74HC245N
I/O PORT EXPANDER
ICC1 CXD1095Q
ICA2 SN74HC541N
TEST S1 DIPSW8
ICA3 SN74HC541N
RB5 10kX8
RB6 10kX8
RB7 10kX8
E3 TPE
ADDRESS DECODER
ICD3 SN74HC138N
SUB CODE MEMORY
ICB2 SN74HC245N
ICB4 SN74HC573N
ICB3 CXK5814P-35L
ICC2 SN74HC541N
ICC3 CY7C245-ENC12-C3
AUX.MEMORY MAPPING
I/O CONTROLLER
ICD2(1/2) SN74HC244N
ICB5(4/4) SN74HC08N
ICB5(1/4) SN74HC08N
ICA5(3/4) SN74HC32N
ICB5(3/4) SN74HC08N
ICB6(1/5) SN74HC04N
ICB5(2/4) SN74HC08N
ICA5(4/4) SN74HC32N
ICB6(2/5) SN74HC04N
ICB6(3/5) SN74HC04N
ICB6(4/5) SN74HC04N
ICB6(5/5) SN74HC04N
CN340
CN341
SY144,320-3C SYS DATA 7
SY144,320-4C SYS DATA 6
SY144,320-5C SYS DATA 5
SY144,320-6C SYS DATA 4
SY144,320-7C SYS DATA 3
SY144,320-8C SYS DATA 2
SY144,320-9C SYS DATA 1
SY144,320-10C SYS DATA 0
SY144,320-6A SYS R/W
SY144,320-11C SYS ADD 7
SY144,320-12C SYS ADD 6
SY144,320-13C SYS ADD 5
SY144,320-14C SYS ADD 4
SY144,320-15C SYS ADD 3
SY144,320-16C SYS ADD 2
SY144,320-17C SYS ADD 1
SY144,320-18C SYS ADD 0
SV116,301-30A ENC CS
SY144,320-20C SYS RD
SY144,320-19C SYS WR
SY144,320-21C SYSTEM READY
SY144,321-30B ENC MY CS
1/3 AUX OE
1/3 CM0-CM6
1/3 NM0-NM3
1/3 ECK
EE/PBA 3/3
EE/PBB 3/3
TEST ER 1/3
TEST REC 3/3
ED0-ED7 1/3, 3/3
+5V

CPU Interface

ENC-12 BOARD (2/3)

BOARD NO.1-634-503-11
HDV-10(J) ;#10001-
HDV-10(UC) ;#10001-
HDV-10(EK) ;#10001-

CARD RACK-1 ENC-12(3/3) ENC-12(3/3) CARD RACK-1

CARD RACK-1 ENC-12(3/3) ENC-12(3/3) CARD RACK-1

COUNTER CONTROLLER
BLK COUNTER A
BLK COUNTER B
BLOCK ADD CONTROL
ERROR GENERATOR
BUFFER
MODULATOR MEMORY
SYNC ID GENERATOR
8/14 MODULATOR
CDS TABLE
DSV REGISTER
TABLE
SYNC ADD CONTROL
OUTPUT CONTROL
NRZI
P/S A
P/S B
MODULATOR CLOCK GENERATOR
ROW COUNTER A
ROW COUNTER B
ROW ADD CONTROL
ADDRESS CONTROL
ROW ADDRESS
TEST REC
MD65,192-15BC
MD65,192-14BC
SG169,131-14C
SG169,131-13C
MD65,192-24AB
MD65,192-26AB
DEC50,132-29A
DEC50,132-30A
MD65,192-20AB
DEC50,132-39B
DEC50,132-30B
MD65,192-21C,22C
MD65,192-21C,24C
EE/PBA
EE/PBB
MCK(E)
A
B
C
D
E
F
G
H
I
J
K
L
M
N
O
1
2
3
4
5

NOTE:

ADDRESS	MARK	CHANGE INFORMATION	SERIAL NO.
I 2	*1	ICL5 CHANGED CXK58257SP-70L →CXK58257ASP-70L	#11001-

8-14 Modulator

ENC-12 BOARD (3/3)

BOARD NO.1-634-503-11
HDV-10(J) ;#10001-
HDV-10(UC) ;#10001-
HDV-10(EK) ;#10001-

H SYNC PLL
AUDIO ADDRESS GEN
BUS ADDRESS GENERATOR 1/192
EDIT ADDRESS GENERATOR
SYNCHRONIZE AUDIO ADDRESS WITH VD
ICK7 PALCE22V10-ED23-K07
CPU CLOCK
GENERATOR & COUNTER
(ECL LEVEL)
TEST SIGNAL ADDRES GEN
1/1200
S1-1: ON :59.94Hz OFF:60.00Hz
S1-2 S1-3 S1-4 FACTORY USE
CLOCK DETECT
S/N:10401-
S/N:10001-10399
SG169,133-8A
SG169,133-7A
AMA0-AMA11
ADA0-ADA9
TDA 0-10
1
2
3
4
5
A
B
C
D
E
F
G
H
I
J
K
L
M
N
O

Sync PLL
Bus/Edit/Test
Address Generator

ED-23 BOARD (1/4)

BOARD NO.1-634-502-11
HDV-10(J) ;#10001-
HDV-10(UC) ;#10001-
HDV-10(EK) ;#10001-

DATA BUFFER
ICC1 SN74HCT254AN
C1
ICA2 SN74HCT254AN
A2
ADDRESS BUFFER
ICC2 74AC244PC
C2
ICB2 74AC244PC
B2
ICE1 MC74HC243N
E1
ADDRESS BUFFER
ICE6 SN74HC244N
E6
ICG6 SN74HC244N
G6
DATA BUFFER
ICE5 SN74HC245N
E5
ICE4 SN74HC245N
E4
I/O EXPANDER
ICG3 CXD1095Q
G3
ICC3 CX23043
C3
ICE3 CX23043
E3
ADDRESS GENERATOR
DIAGNOSTICS MEMORY
ICC5 CXK58257ASP-70L
C5
ICC4 CXK58257ASP-70L
C4
AUDIO DATA BUFFER
ICB5 SN74HC245N
B5
ICB4 SN74HC245N
B4
DIAGNOSTICS MEMORY I/O SELECTOR
ICE2 PALC16V8H-E023-E02
E2
ED-23 ADDRESS DECODER
ICB1 PALCE22V10-E023-E01
B1
AUDIO BUS
ICG4 SN74HC688N
G4
ADDRESS SELECTOR
ICG5 SN74HC688N
G5
ICA3 SN74HC125N
ICD10 SN74HC14N
D10
AUDIO DATA BUFFER
ICA5 SN74HC240N
A5
BIDIRECTIONAL/PROCESSOR OUT DATA/EDIT MEMORY ADDRESS BUFFER
ICA7 74LS646NT
A7
ICC6 SN74HC374N
C6
ICC7 74ACT574PC
C7
ICB8 SN74HC541N
B8
ICA6 74LS646NT
A6
ICB6 SN74HC374N
B6
ICB7 74ACT574PC
B7
ICC8 74ACT574PC
C8
AUDIO DATA BUFFER
ICA4 74LS646NT
A4
EDIT DIAGNOSIS
CN330
CN331
SYD 0-15 1/4,3/4,4/4
SYA 0-11 1/4,3/4,4/4
SYC 2-4,7,9,10 1/4,3/4,4/4
LD 1/4
AIE 0-3 3/4
CEC2,3,7,9,10,13,14,16 3/4
CSA 1,2 4/4
AMP 0-14 3/4
CED 0-15 3/4
AID 0-15 3/4
ADA 1,7,9 1/4
SY READY 4/4
ADA 1-7 1/4
APA 1/4
1
2
3
4
5
A
B
C
D
E
F
G
H
I
J
K
L
M
N
O
P

NOTE:

ADDRESS	MARK	CHANGE INFORMATION	SERIAL NO.
C1	*1	ICA2,ICC1 CHANGED 74ACT245PC → SN74HCT254AN	#10301-
C4	*2	ICE1 CHANGED 74F243PC → SN74HC243N	
C4	*3	ICE1 CHANGED SN74HC243N → MC74HC243N	#10901-
I1,I3	*4	ICC4,C5 CHANGED CXK58257SP-70L → CXK58257ASP-70L	#11001-

Audio Bus Diagnostic

ED-23 BOARD (2/4)

BOARD NO.1-634-502-11
HDV-10(J) ;#10001-
HDV-10(UC) ;#10001-
HDV-10(EK) ;#10001-

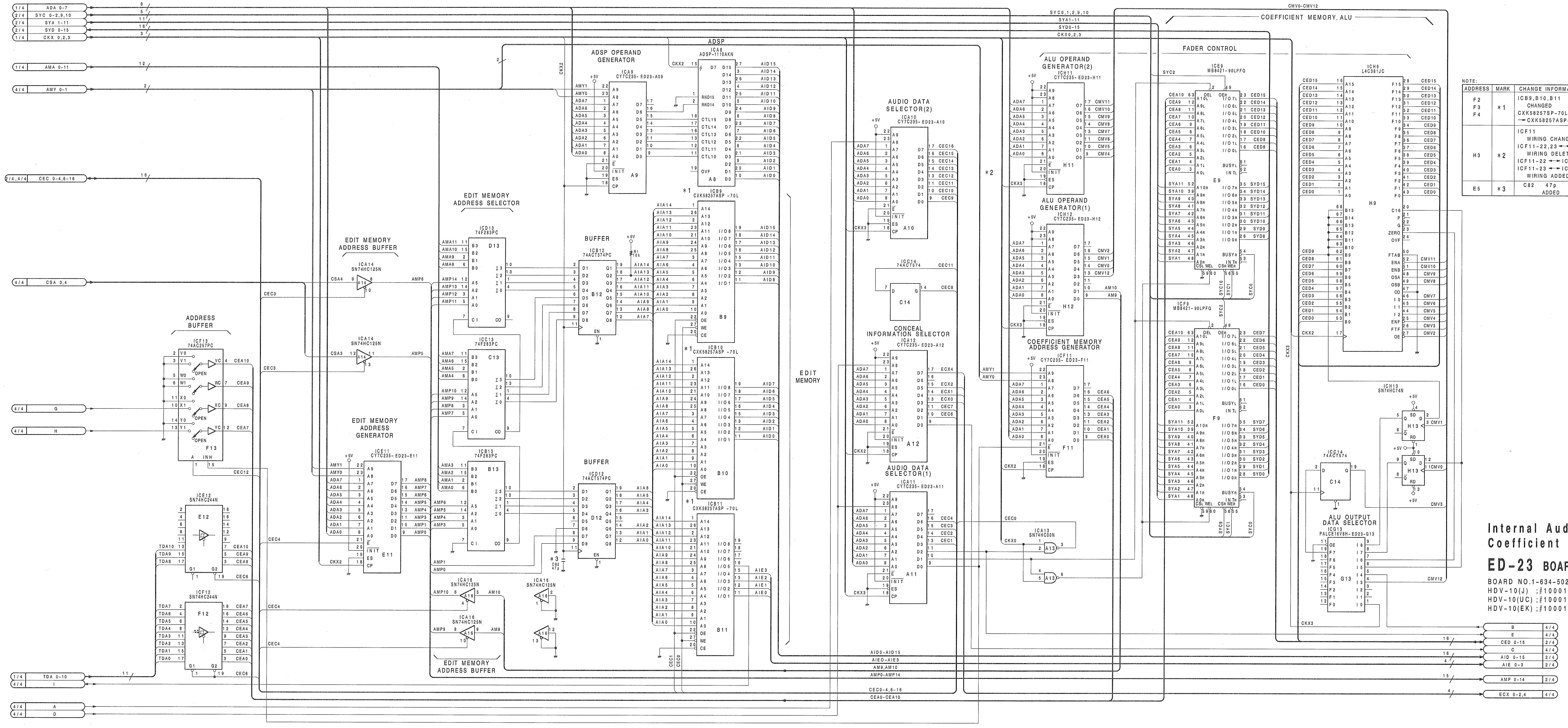
ADA 0-7
SYC 0-2,9,10
SYA 1-11
SYD 0-15
CKX 0,2,3
AMA 0-11
AMY 0-1
CEC 0-4,6-16
CSA 3,4
G
H
TDA 0-10
I
A
D
ADDRESS BUFFER
ICF13 74AC257PC
F13
OPEN
ICE12 SN74HC244N
E12
ICF12 SN74HC244N
F12
EDIT MEMORY ADDRESS BUFFER
ICA14 SN74HC125N
EDIT MEMORY ADDRESS SELECTOR
ICD13 74F283PC
D13
ICC13 74F283PC
C13
ICB13 74F283PC
B13
EDIT MEMORY ADDRESS GENERATOR
ICE11 CY7C235- ED23-E11
E11
ICA16 SN74HC125N
ADSP OPERAND GENERATOR
ICA9 CY7C235- ED23-A09
A9
ADSP
ICA8 ADSP-1110AKN
A8
BUFFER
ICB12 74ACT574PC
B12
ICD12 74ACT574PC
D12
ICB9 CXK58257ASP -70L
B9
ICB10 CXK58257ASP -70L
B10
ICB11 CXK58257ASP -70L
B11
EDIT MEMORY
AUDIO DATA SELECTOR(2)
ICA10 CY7C235- ED23-A10
A10
ICC14 74ACT574
C14
CONCEAL INFORMATION SELECTOR
ICA12 CY7C235- ED23-A12
A12
AUDIO DATA SELECTOR(1)
ICA11 CY7C235- ED23-A11
A11
ALU OPERAND GENERATOR(2)
ICH11 CY7C235- ED23-H11
H11
ALU OPERAND GENERATOR(1)
ICH12 CY7C235- ED23-H12
H12
COEFFICIENT MEMORY ADDRESS GENERATOR
ICF11 CY7C235- ED23-F11
F11
ICA13 SN74HC00N
A13
FADER CONTROL
ICE9 MB8421-90LPFQ
E9
ICF9 MB8421-90LPFQ
F9
COEFFICIENT MEMORY, ALU
ICH9 L4C381JC
H9
ICH13 SN74HC74N
H13
ICC14 74ACT574
C14
ALU OUTPUT DATA SELECTOR
ICG13 PALCE16V8H-ED23-G13
G13
CMV0-CMV12
SYC0,1,2,9,10
SYA1-11
SYD0-15
CKX0,2,3
AID0-AID15
AIE0-AIE3
AM9,AM10
AMP0-AMP14
CEC0-4,6-16
CEA0-CEA10
B
E
CED 0-15
C
AID 0-15
AIE 0-3
AMP 0-14
ECX 0-2,4
*1
*2
*3
C82 47p
1
2
3
4
5
A
B
C
D
E
F
G
H
I
J
K
L

NOTE:

ADDRESS	MARK	CHANGE INFORMATION	SERIAL NO.
F2 F3 F4	*1	ICB9,B10,B11 CHANGED CXK58257SP-70L →CXK58257ASP-70L	#11001-
H3	*2	ICF11 WIRING CHANGED ICF11-22,23 ↔ +5V WIRING DELETED ICF11-22 ↔ ICC14-17 ICF11-23 ↔ ICC14-18 WIRING ADDED	#11103-
E5	*3	C82 47p ADDED	#11901-

Internal Audio Data Block
Coefficient Data Block

ED-23 BOARD (3/4)

BOARD NO.1-634-502-11
HDV-10(J) ;#10001-
HDV-10(UC) ;#10001-
HDV-10(EK) ;#10001-

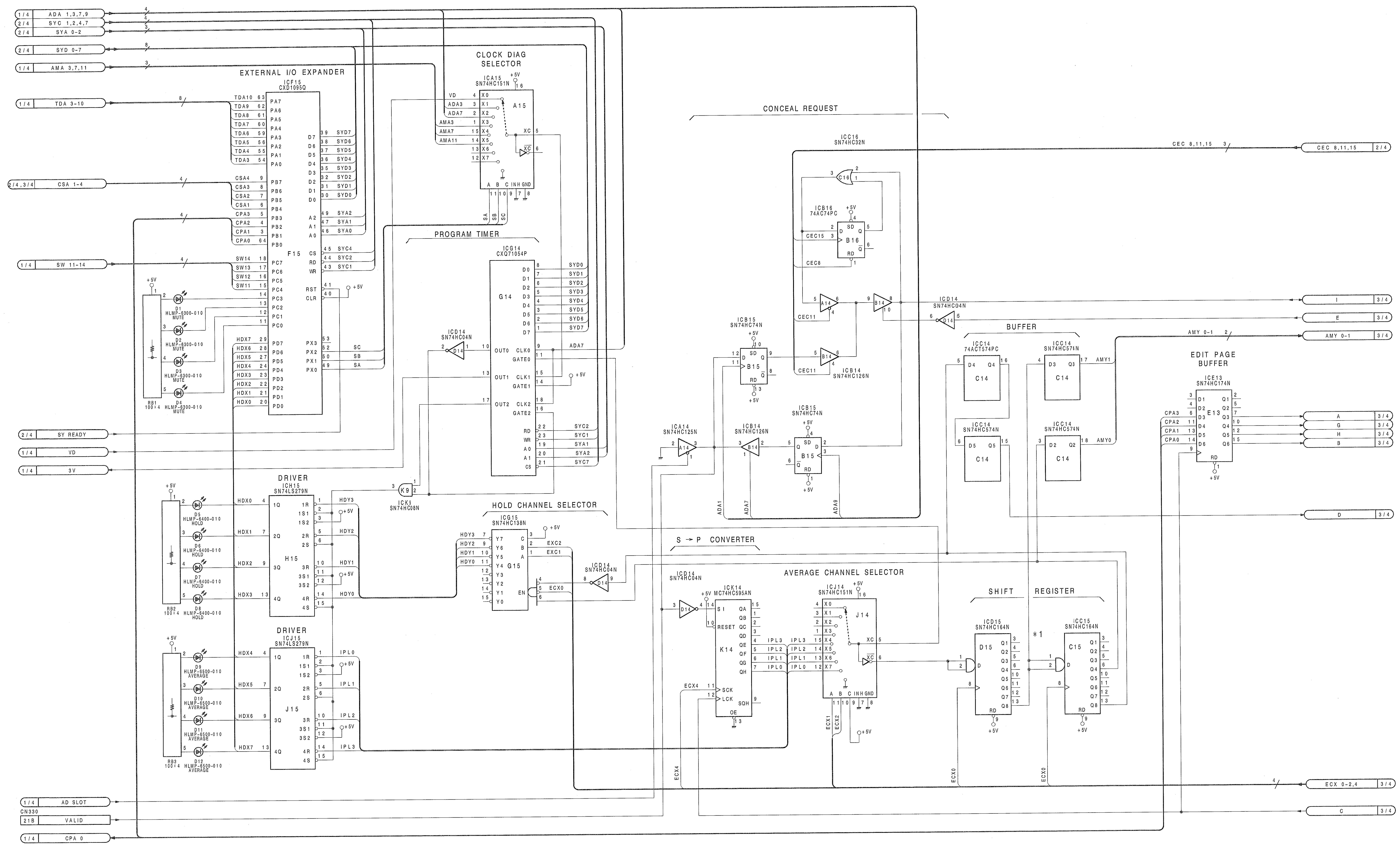
ADA 1,3,7,9
SYC 1,2,4,7
SYA 0-2
SYD 0-7
AMA 3,7,11
TDA 3-10
CSA 1-4
SW 11-14
SY READY
VD
3V
AD SLOT
CN330
VALID
CPA 0
EXTERNAL I/O EXPANDER
ICF15
CXD1095Q
F15
CLOCK DIAG SELECTOR
ICA15
SN74HC151N
A15
PROGRAM TIMER
ICG14
CXQ71054P
G14
CONCEAL REQUEST
ICC16
SN74HC32N
ICB16
74AC74PC
B16
ICB15
SN74HC74N
B15
ICB14
SN74HC126N
ICA14
SN74HC125N
ICD14
SN74HC04N
BUFFER
ICC14
74ACT574PC
SN74HC574N
C14
EDIT PAGE BUFFER
ICE13
SN74HC174N
E13
CEC 8,11,15
AMY 0-1
I
E
A
G
H
B
D
ECX 0-2,4
C
DRIVER
ICH15
SN74LS279N
H15
DRIVER
ICJ15
SN74LS279N
J15
ICK1
SN74HC08N
K9
HOLD CHANNEL SELECTOR
ICG15
SN74HC138N
G15
S → P CONVERTER
ICK14
MC74HC595AN
K14
AVERAGE CHANNEL SELECTOR
ICJ14
SN74HC151N
J14
SHIFT REGISTER
ICD15
SN74HC164N
D15
ICC15
SN74HC164N
C15
*1
D1 HLMP-6300-010 MUTE
D2 HLMP-6300-010 MUTE
D3 HLMP-6300-010 MUTE
D4 HLMP-6300-010 MUTE
D5 HLMP-6400-010 HOLD
D6 HLMP-6400-010 HOLD
D7 HLMP-6400-010 HOLD
D8 HLMP-6400-010 HOLD
D9 HLMP-6500-010 AVERAGE
D10 HLMP-6500-010 AVERAGE
D11 HLMP-6500-010 AVERAGE
D12 HLMP-6500-010 AVERAGE
RB1 100×4
RB2 100×4
RB3 100×4
+5V

NOTE;

ADDRESS	MARK	CHANGE INFORMATION	SERIAL NO.
H5	*1	ICC14,D15 WIRING CHANGED ICD15-6 ←→ ICC14-4 WIRING DELETED ICD15-13 ←→ ICC14-4 WIRING ADDED	#11103-

1

2

3

4

5

Average CH Detector
Hold CH Generator

ED-23 BOARD (4/4)

BOARD NO.1-634-502-11
HDV-10(J) ;#10001-
HDV-10(UC) ;#10001-
HDV-10(EK) ;#10001-

A B C D E F G H I J K L

S/N;10301 and higher

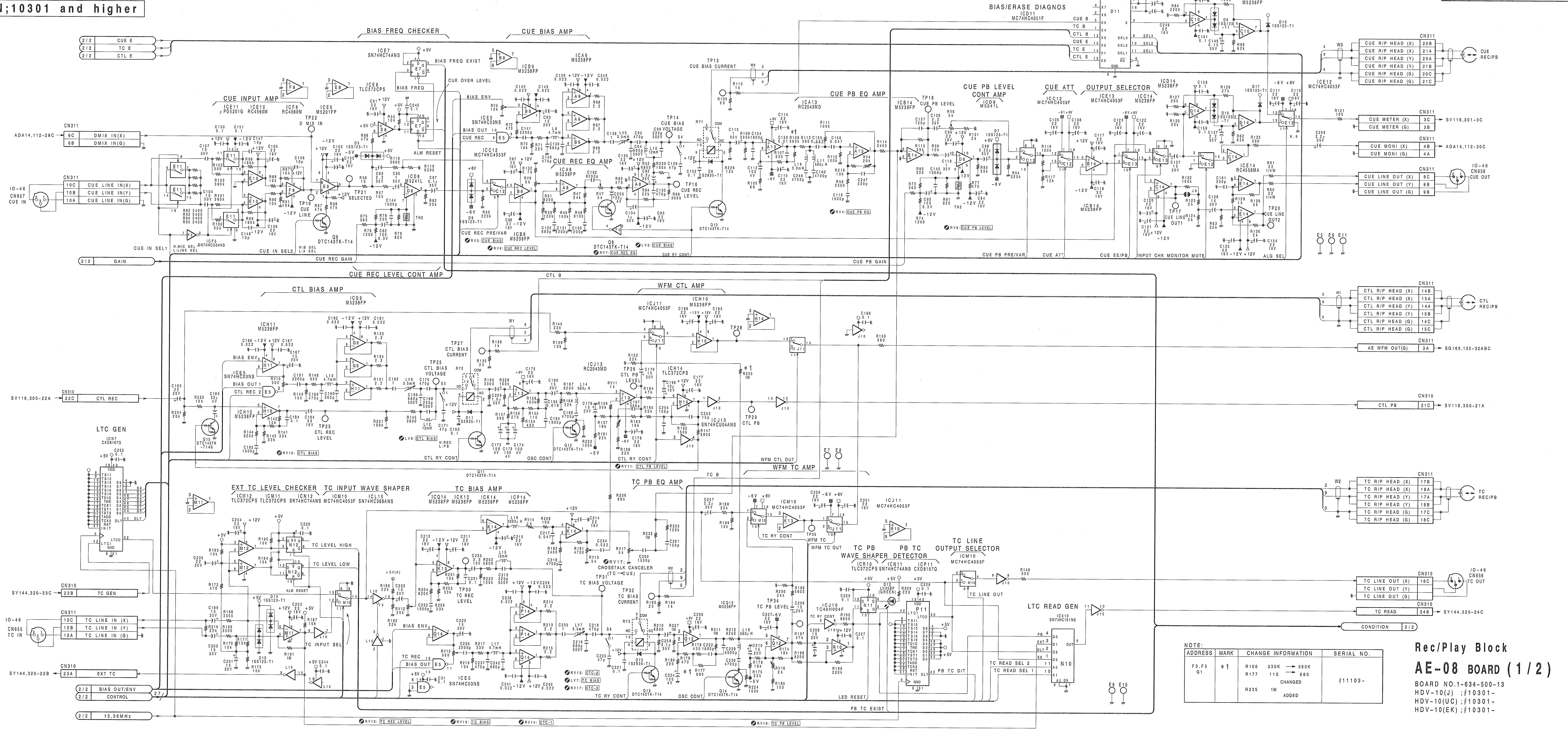
BIAS FREQ CHECKER
CUE BIAS AMP
CUE INPUT AMP
CUE REC EQ AMP
CUE REC LEVEL CONT AMP
CUE PB EQ AMP
CUE PB LEVEL CONT AMP
CUE ATT
OUTPUT SELECTOR
BIAS/ERASE DIAGNOS
CTL BIAS AMP
WFM CTL AMP
LTC GEN
EXT TC LEVEL CHECKER
TC INPUT WAVE SHAPER
TC BIAS AMP
TC PB EQ AMP
WFM TC AMP
TC PB WAVE SHAPER
PB TC DETECTOR
TC LINE OUTPUT SELECTOR
LTC READ GEN
CUE E
TC E
CTL E
GAIN
BIAS OUT/ENV
CONTROL
15.36MHz
CUE R/P HEAD
CUE METER
CUE MONI
CUE LINE OUT
CTL R/P HEAD
AE WFM OUT(G)
CTL PB
CTL REC
TC R/P HEAD
TC LINE OUT
TC READ
CONDITION
TC GEN
TC LINE IN
EXT TC
DMIX IN
CUE LINE IN
1
2
3
4
5

NOTE:

ADDRESS	MARK	CHANGE INFORMATION	SERIAL NO.
F3,F5 G1	＊1	R106 330K → 390K R177 110 → 680 CHANGED R235 1M ADDED	#11103-

Rec/Play Block

AE-08 BOARD (1/2)

BOARD NO.1-634-500-13
HDV-10(J) ;#10301-
HDV-10(UC) ;#10301-
HDV-10(EK) ;#10301-

A B C D E F G H I J K L

S/N;10201 through 10299

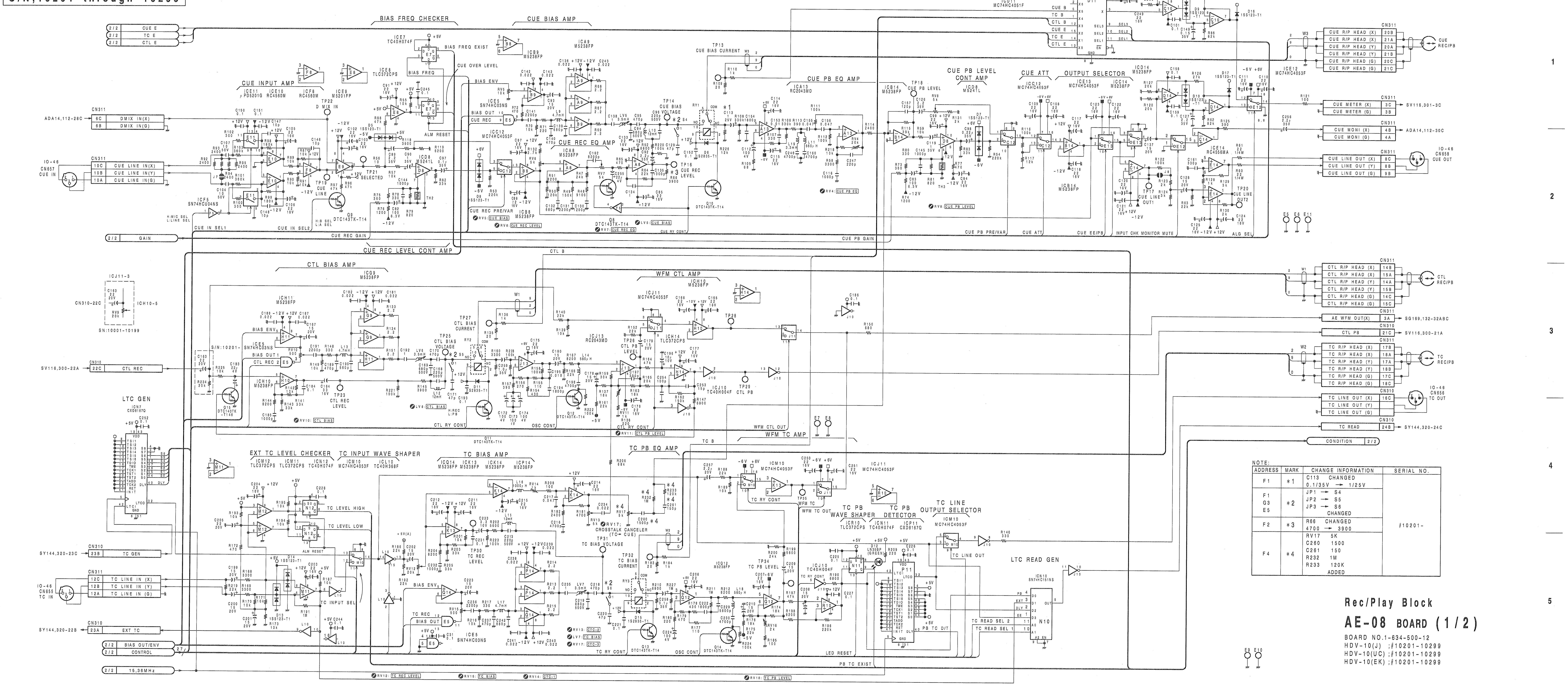
BIAS FREQ CHECKER
CUE BIAS AMP
BIAS/ERASE DIAGNOS
CUE INPUT AMP
CUE REC EQ AMP
CUE PB EQ AMP
CUE PB LEVEL CONT AMP
CUE ATT
OUTPUT SELECTOR
CUE REC LEVEL CONT AMP
CTL BIAS AMP
WFM CTL AMP
LTC GEN
EXT TC LEVEL CHECKER
TC INPUT WAVE SHAPER
TC BIAS AMP
TC PB EQ AMP
WFM TC AMP
TC PB WAVE SHAPER
TC PB DETECTOR
TC LINE OUTPUT SELECTOR
LTC READ GEN
CUE REC/PB
CTL REC/PB
TC REC/PB
CUE IN
CUE OUT
TC IN
TC OUT
A
B
C
D
E
F
G
H
I
J
K
L
1
2
3
4
5

NOTE:

ADDRESS	MARK	CHANGE INFORMATION	SERIAL NO.
F1	*1	C113 CHANGED 0.1/35V → 1/25V	#10201-
F1 G3 E5	*2	JP1 → S4 JP2 → S5 JP3 → S6 CHANGED	
F2	*3	R66 CHANGED 4700 → 3900	
F4	*4	RV17 5K C260 1500 C261 150 R232 1M R233 120K ADDED	

Rec/Play Block

AE-08 BOARD (1/2)

BOARD NO.1-634-500-12
HDV-10(J) ;#10201-10299
HDV-10(UC) ;#10201-10299
HDV-10(EK) ;#10201-10299

S/N;10001 through 10199

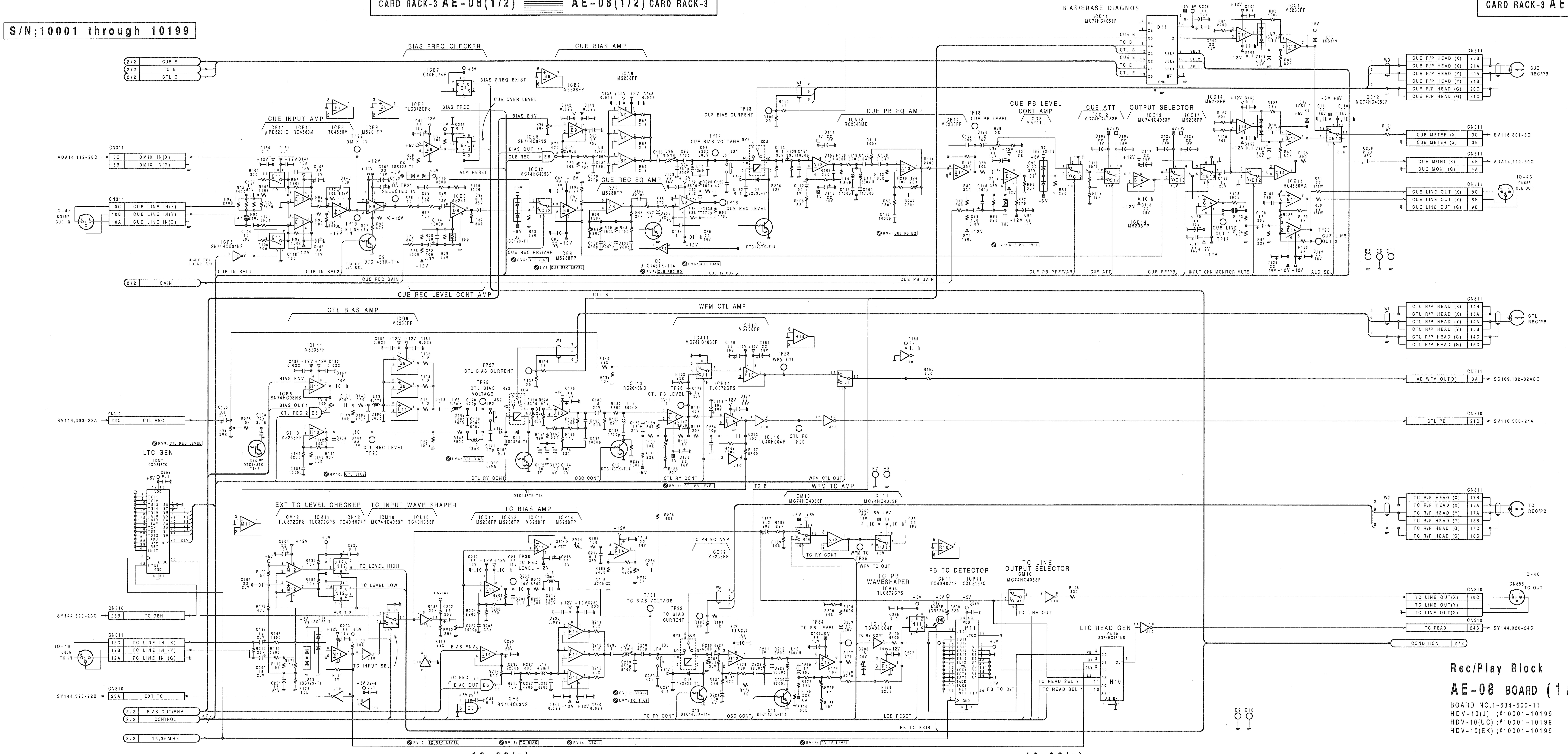
BIAS FREQ CHECKER
CUE BIAS AMP
BIAS/ERASE DIAGNOS
CUE INPUT AMP
CUE REC EQ AMP
CUE PB EQ AMP
CUE PB LEVEL CONT AMP
CUE ATT
OUTPUT SELECTOR
CUE REC LEVEL CONT AMP
CTL BIAS AMP
WFM CTL AMP
LTC GEN
EXT TC LEVEL CHECKER
TC INPUT WAVE SHAPER
TC BIAS AMP
WFM TC AMP
TC PB EQ AMP
PB TC DETECTOR
TC PB WAVESHAPER
TC LINE OUTPUT SELECTOR
LTC READ GEN
CUE E
TC E
CTL E
GAIN
BIAS OUT/ENV
CONTROL
15.36MHz
CONDITION 2/2
CUE R/P HEAD
CUE REC/PB
CUE METER
CUE MONI
CUE LINE OUT
CTL R/P HEAD
CTL REC/PB
AE WFM OUT(X)
CTL PB
TC R/P HEAD
TC REC/PB
TC LINE OUT
TC READ
CUE LINE IN
TC LINE IN
TC GEN
EXT TC
CTL REC
DMIX IN

Rec/Play Block

AE-08 BOARD (1/2)

BOARD NO.1-634-500-11
HDV-10(J) ;#10001-10199
HDV-10(UC) ;#10001-10199
HDV-10(EK) ;#10001-10199

S/N;11103 and higher

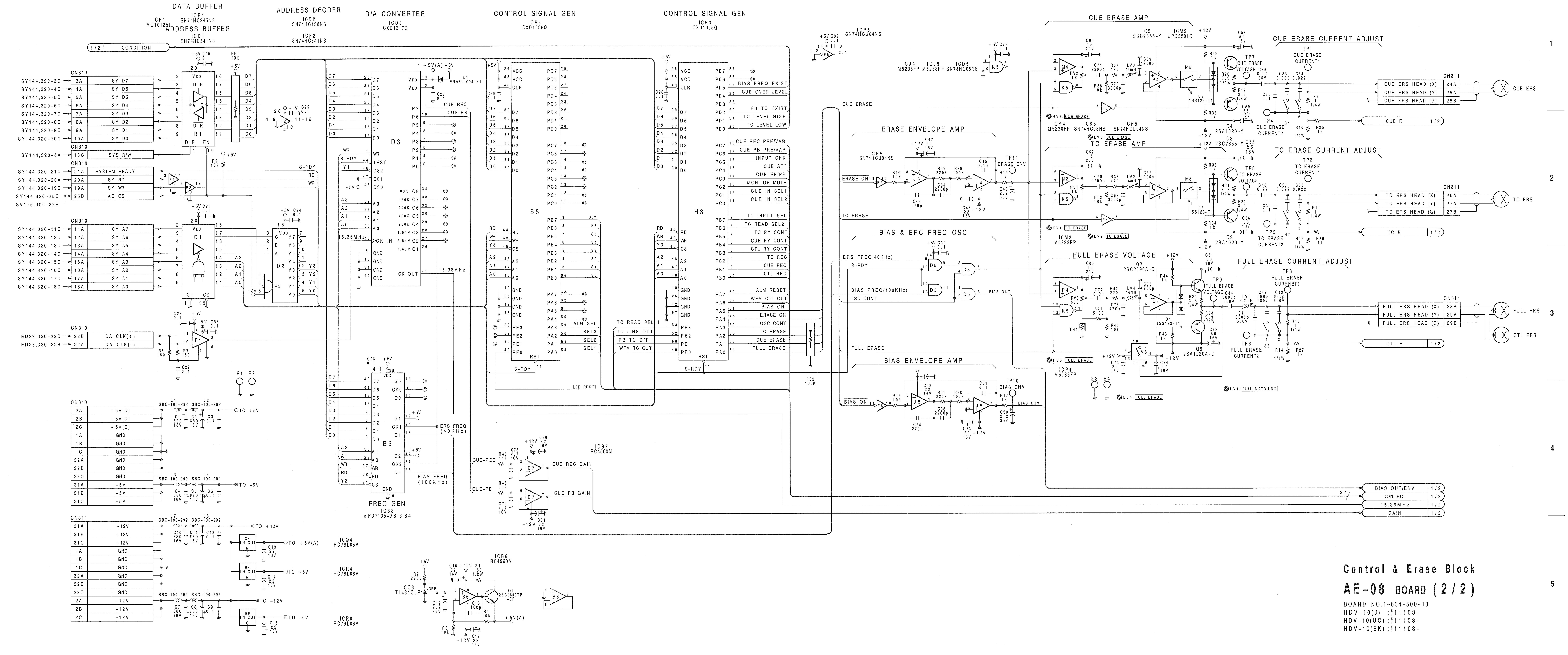
DATA BUFFER
ICB1 SN74HC245NS
ICF1 MC10125L
ADDRESS BUFFER
ICD1 SN74HC541NS
ADDRESS DEODER
ICD2 SN74HC138NS
ICF2 SN74HC541NS
D/A CONVERTER
ICD3 CXD1317Q
CONTROL SIGNAL GEN
ICB5 CXD1095Q
CONTROL SIGNAL GEN
ICH3 CXD1095Q
1/2 CONDITION
CN310
CN311
B1
D1
D2
D3
B5
H3
B3
FREQ GEN
ICB3 μPD71054GB-3 B4
ICB7 RC4560M
CUE REC GAIN
CUE PB GAIN
ERS FREQ (40KHz)
BIAS FREQ (100KHz)
15.36MHz
ICQ4 RC78L05A
ICR4 RC78L06A
ICR8 RC79L06A
ICC8 TL431CLP
ICB8 RC4560M
TO +5V
TO -5V
TO +12V
TO +5V(A)
TO +6V
TO -12V
TO -6V
BIAS FREQ EXIST
CUE OVER LEVEL
PB TC EXIST
TC LEVEL HIGH
TC LEVEL LOW
CUE REC PRE/VAR
CUE PB PRE/VAR
INPUT CHK
CUE ATT
CUE EE/PB
MONITOR MUTE
CUE IN SEL1
CUE IN SEL2
TC INPUT SEL
TC READ SEL2
TC RY CONT
CUE RY CONT
CTL RY CONT
TC REC
CUE REC
CTL REC
ALM RESET
WFM CTL OUT
BIAS ON
ERASE ON
OSC CONT
TC ERASE
CUE ERASE
FULL ERASE
TC READ SEL
TC LINE OUT
PB TC D/T
WFM TC OUT
LED RESET
ICF5 SN74HCU04NS
ICJ4 M5238FP
ICJ5 M5238FP
ICD5 SN74HC08NS
ERASE ENVELOPE AMP
BIAS & ERC FREQ OSC
BIAS ENVELOPE AMP
ERASE ENV
BIAS ENV
BIAS OUT
ERS FREQ(40KHz)
S-RDY
BIAS FREQ(100KHz)
OSC CONT
CUE ERASE AMP
Q5 2SC2655-Y
ICM5 UPD5201G
CUE ERASE CURRENT ADJUST
TP1 CUE ERASE CURRENT1
TP7 CUE ERASE VOLTAGE
TP4 CUE ERASE CURRENT2
Q4 2SA1020-Y
ICM4 M5238FP
ICK5 SN74HC03NS
ICF5 SN74HCU04NS
RV2 CUE ERASE
LV3 CUE ERASE
CUE ERS HEAD (X)
CUE ERS HEAD (Y)
CUE ERS HEAD (G)
CUE ERS
CUE E
TC ERASE AMP
Q3 2SC2655-Y
TC ERASE CURRENT ADJUST
TP2 TC ERASE CURRENT1
TP8 TC ERASE VOLTAGE
TP5 TC ERASE CURRENT2
Q2 2SA1020-Y
ICM2 M5238FP
RV1 TC ERASE
LV2 TC ERASE
TC ERS HEAD (X)
TC ERS HEAD (Y)
TC ERS HEAD (G)
TC ERS
TC E
FULL ERASE VOLTAGE
Q7 2SC2690A-Q
FULL ERASE CURRENT ADJUST
TP3 FULL ERASE CURRNET1
TP9 FULL ERASE VOLTAGE
TP6 FULL ERASE CURRENT2
Q6 2SA1220A-Q
ICP4 M5238FP
RV3 FULL ERASE
LV4 FULL ERASE
LV1 FULL MATCHING
FULL ERS HEAD (X)
FULL ERS HEAD (Y)
FULL ERS HEAD (G)
FULL ERS
CTL ERS
CTL E
BIAS OUT/ENV
CONTROL
15.36MHz
GAIN

Control & Erase Block

AE-08 BOARD (2/2)

BOARD NO.1-634-500-13
HDV-10(J) ;♯11103-
HDV-10(UC) ;♯11103-
HDV-10(EK) ;♯11103-

S/N;10301 through 11102

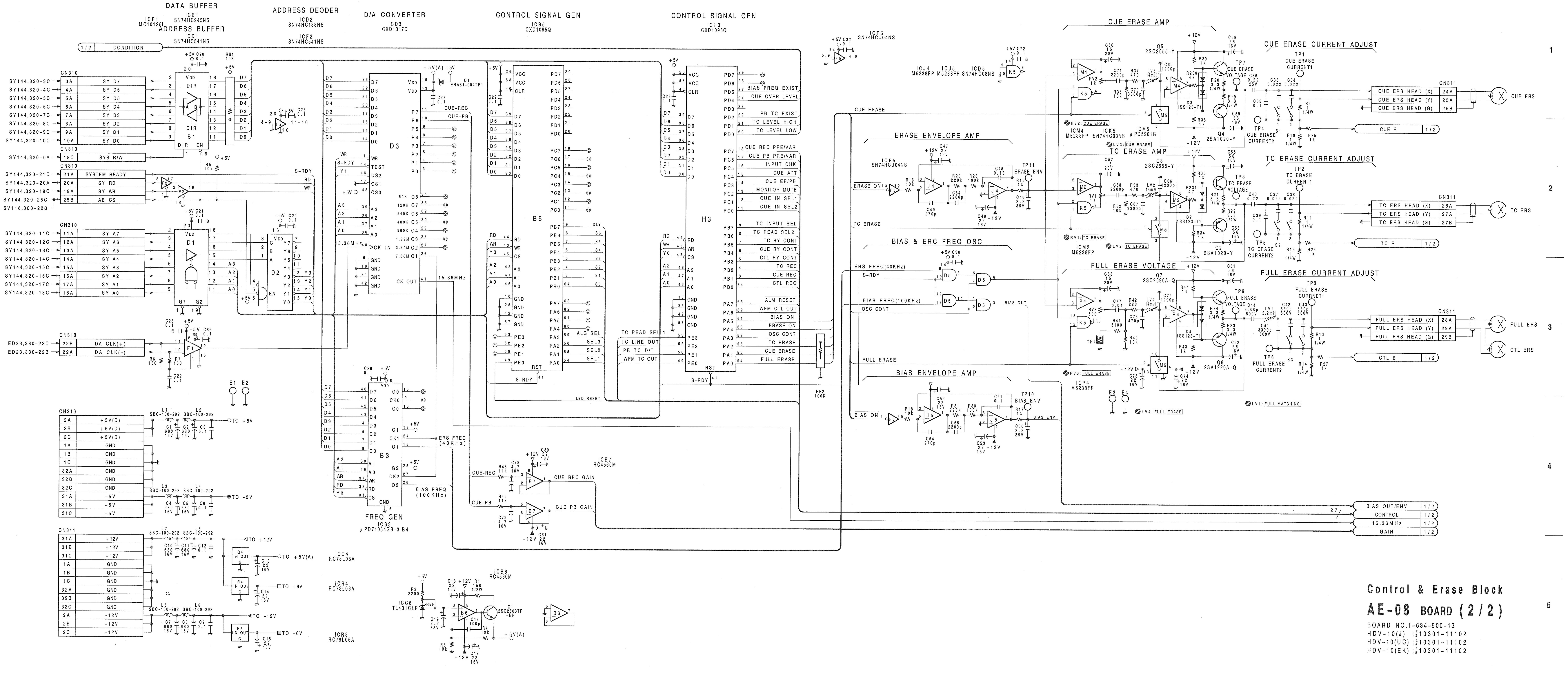
DATA BUFFER
ICB1 SN74HC245NS
ADDRESS BUFFER
ICD1 SN74HC541NS
ICF1 MC10125L
ADDRESS DEODER
ICD2 SN74HC138NS
ICF2 SN74HC541NS
D/A CONVERTER
ICD3 CXD1317Q
CONTROL SIGNAL GEN
ICB5 CXD1095Q
CONTROL SIGNAL GEN
ICH3 CXD1095Q
ICF5 SN74HCU04NS
ICJ4 M5238FP
ICJ5 M5238FP
ICD5 SN74HC08NS
CUE ERASE AMP
CUE ERASE CURRENT ADJUST
ERASE ENVELOPE AMP
TC ERASE AMP
TC ERASE CURRENT ADJUST
BIAS & ERC FREQ OSC
FULL ERASE VOLTAGE
FULL ERASE CURRENT ADJUST
BIAS ENVELOPE AMP
FREQ GEN
ICB3 μPD71054GB-3 B4
ICB7 RC4560M
ICB6 RC4560M
ICC6 TL431CLP
ICQ4 RC78L05A
ICR4 RC78L06A
ICR8 RC79L06A
ICM4 M5238FP
ICK5 SN74HC03NS
ICM5 μPD5201G
ICM2 M5238FP
ICP4 M5238FP
CN310
CN311
CONDITION
SYS R/W
SYSTEM READY
SY RD
SY WR
AE CS
DA CLK(+)
DA CLK(-)
CUE-REC
CUE-PB
CUE REC GAIN
CUE PB GAIN
ERS FREQ (40KHz)
BIAS FREQ (100KHz)
15.36MHz
S-RDY
BIAS FREQ EXIST
CUE OVER LEVEL
PB TC EXIST
TC LEVEL HIGH
TC LEVEL LOW
CUE REC PRE/VAR
CUE PB PRE/VAR
INPUT CHK
CUE ATT
CUE EE/PB
MONITOR MUTE
CUE IN SEL1
CUE IN SEL2
TC INPUT SEL
TC READ SEL2
TC RY CONT
CUE RY CONT
CTL RY CONT
TC REC
CUE REC
CTL REC
ALM RESET
WFM CTL OUT
BIAS ON
ERASE ON
OSC CONT
TC ERASE
CUE ERASE
FULL ERASE
ALG SEL
SEL3
SEL2
SEL1
TC READ SEL1
TC LINE OUT
PB TC D/T
WFM TC OUT
LED RESET
ERASE ON
ERS FREQ(40KHz)
S-RDY
BIAS FREQ(100KHz)
OSC CONT
BIAS ON
BIAS ENV
ERASE ENV
CUE ERS HEAD (X)
CUE ERS HEAD (Y)
CUE ERS HEAD (G)
CUE ERS
TC ERS HEAD (X)
TC ERS HEAD (Y)
TC ERS HEAD (G)
TC ERS
FULL ERS HEAD (X)
FULL ERS HEAD (Y)
FULL ERS HEAD (G)
FULL ERS
CTL ERS
CUE E 1/2
TC E 1/2
CTL E 1/2
BIAS OUT/ENV 1/2
CONTROL 1/2
15.36MHz 1/2
GAIN 1/2
RV2:CUE ERASE
LV3:CUE ERASE
RV1:TC ERASE
LV2:TC ERASE
RV3:FULL ERASE
LV4:FULL ERASE
LV1:FULL MATCHING
TO +5V
TO -5V
TO +12V
TO +5V(A)
TO +6V
TO -12V
TO -6V
1
2
3
4
5

Control & Erase Block

AE-08 BOARD (2/2)

BOARD NO.1-634-500-13
HDV-10(J) ;#10301-11102
HDV-10(UC) ;#10301-11102
HDV-10(EK) ;#10301-11102

S/N;10201 through 10299

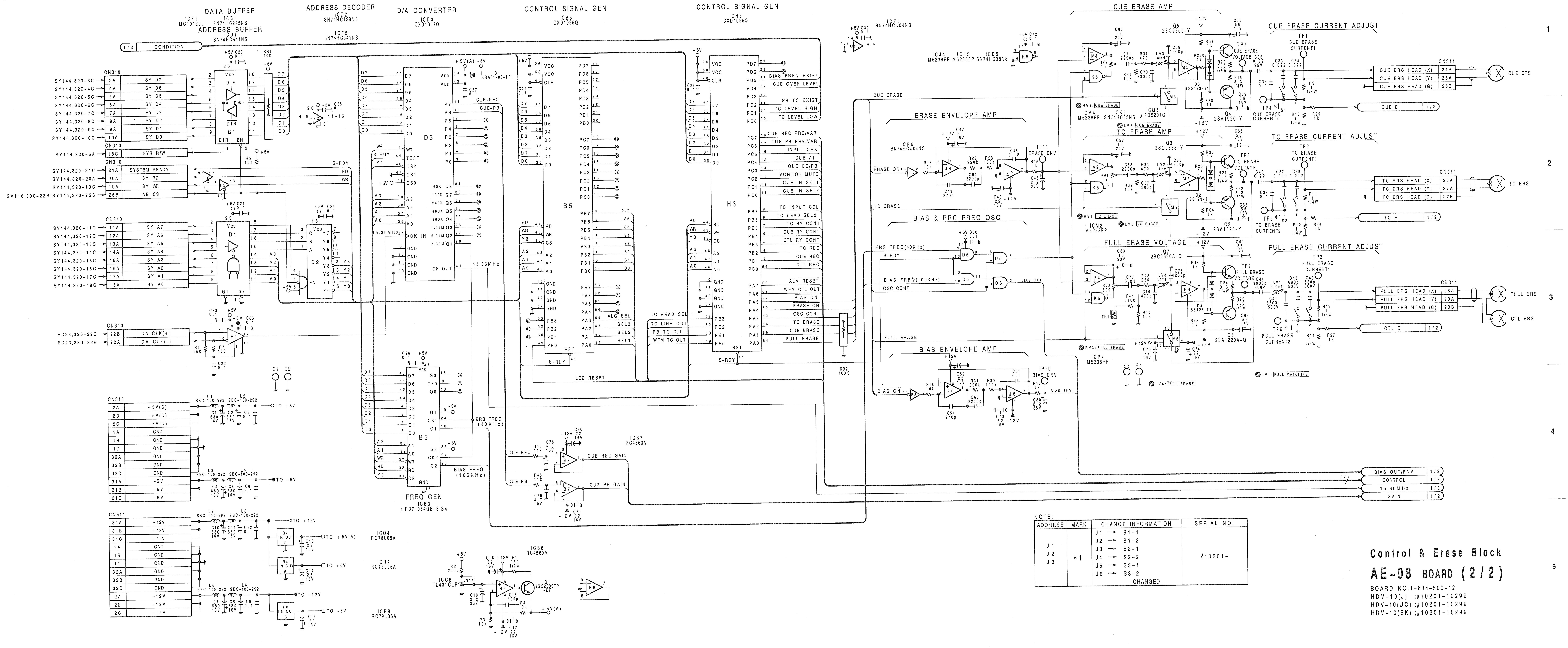
DATA BUFFER
ICF1 MC10125L
ICB1 SN74HC245NS
ADDRESS BUFFER
ICD1 SN74HC541NS
ADDRESS DECODER
ICD2 SN74HC138NS
ICF2 SN74HC541NS
D/A CONVERTER
ICD3 CXD1317Q
CONTROL SIGNAL GEN
ICB5 CXD1095Q
CONTROL SIGNAL GEN
ICH3 CXD1095Q
ICF5 SN74HCU04NS
ICJ4 M5238FP
ICJ5 M5238FP
ICD5 SN74HC08NS
CONDITION
CN310
CN311
SYSTEM READY
SY RD
SY WR
AE CS
SYS R/W
DA CLK(+)
DA CLK(-)
FREQ GEN
ICB3 μPD71054GB-3 B4
ICB7 RC4560M
CUE REC GAIN
CUE PB GAIN
ERS FREQ (40KHz)
BIAS FREQ (100KHz)
15.36MHz
LED RESET
CUE ERASE AMP
CUE ERASE CURRENT ADJUST
ERASE ENVELOPE AMP
TC ERASE AMP
TC ERASE CURRENT ADJUST
BIAS & ERC FREQ OSC
FULL ERASE VOLTAGE
FULL ERASE CURRENT ADJUST
BIAS ENVELOPE AMP
ICM4 M5238FP
ICK5 SN74HC03NS
ICM5 μPD5201G
ICM2 M5238FP
ICP4 M5238FP
CUE ERS HEAD (X)
CUE ERS HEAD (Y)
CUE ERS HEAD (G)
TC ERS HEAD (X)
TC ERS HEAD (Y)
TC ERS HEAD (G)
FULL ERS HEAD (X)
FULL ERS HEAD (Y)
FULL ERS HEAD (G)
CUE ERS
TC ERS
FULL ERS
CTL ERS
CUE E
TC E
CTL E
BIAS OUT/ENV
CONTROL
GAIN
ICO4 RC78L05A
ICR4 RC78L06A
ICR8 RC79L06A
ICB6 RC4560M
ICC6 TL431CLP
Q1 2SC2603TP-EF
+5V(D)
GND
-5V
+12V
-12V
+5V(A)
+6V
-6V

NOTE:

ADDRESS	MARK	CHANGE INFORMATION	SERIAL NO.
J1 J2 J3	＊1	J1 → S1-1 J2 → S1-2 J3 → S2-1 J4 → S2-2 J5 → S3-1 J6 → S3-2 CHANGED	#10201-

Control & Erase Block

AE-08 BOARD (2/2)

BOARD NO.1-634-500-12
HDV-10(J) ;#10201-10299
HDV-10(UC) ;#10201-10299
HDV-10(EK) ;#10201-10299

S/N;10001 through 10199

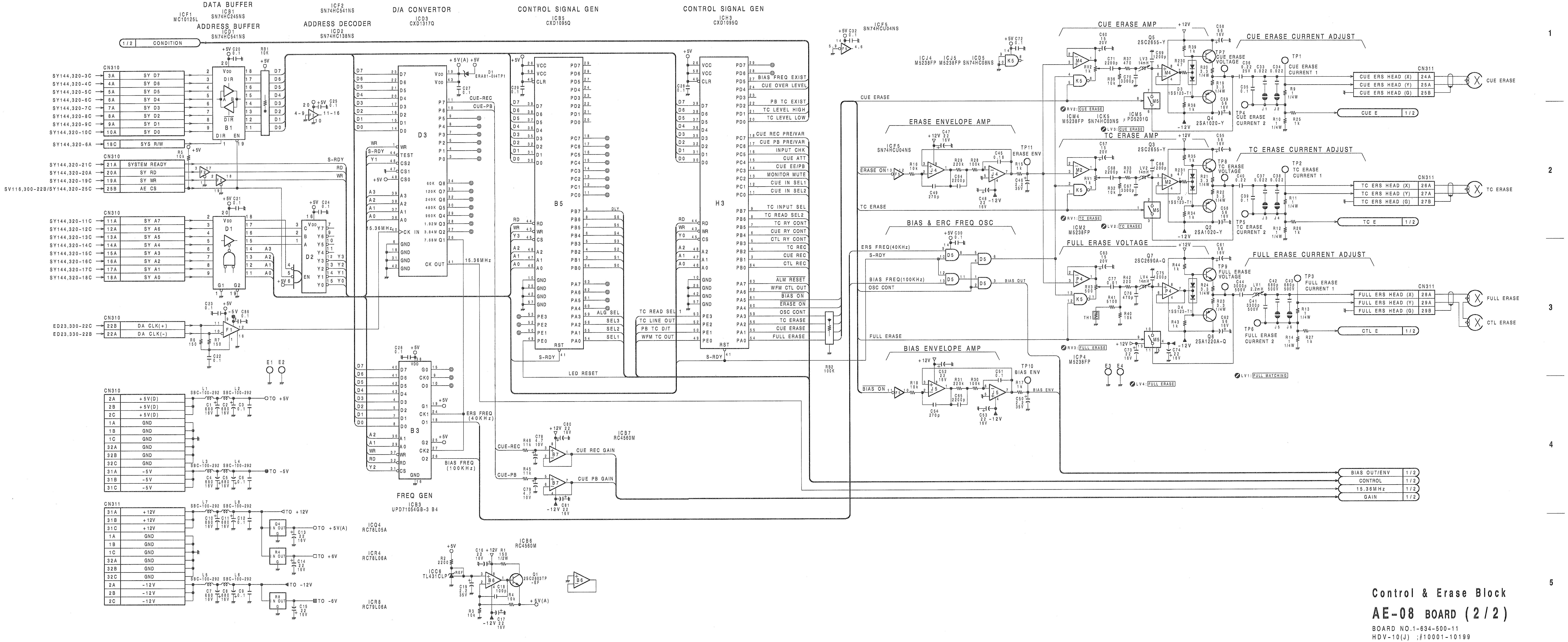
DATA BUFFER
ICB1 SN74HC245NS
ICF1 MC10125L
ADDRESS BUFFER
ICD1 SN74HC541NS
ICF2 SN74HC541NS
ADDRESS DECODER
ICD2 SN74HC138NS
D/A CONVERTOR
ICD3 CXD1317Q
CONTROL SIGNAL GEN
ICB5 CXD1095Q
CONTROL SIGNAL GEN
ICH3 CXD1095Q
CONDITION
CN310
SY144,320-3C
SY144,320-4C
SY144,320-5C
SY144,320-6C
SY144,320-7C
SY144,320-8C
SY144,320-9C
SY144,320-10C
SY144,320-6A
SY D7
SY D6
SY D5
SY D4
SY D3
SY D2
SY D1
SY D0
SYS R/W
SYSTEM READY
SY RD
SY WR
AE CS
SY144,320-21C
SY144,320-20A
SY144,320-19C
SV116,300-22B/SY144,320-25C
SY144,320-11C
SY144,320-12C
SY144,320-13C
SY144,320-14C
SY144,320-15C
SY144,320-16C
SY144,320-17C
SY144,320-18C
SY A7
SY A6
SY A5
SY A4
SY A3
SY A2
SY A1
SY A0
ED23,330-22C
ED23,330-22B
DA CLK(+)
DA CLK(-)
S-RDY
15.36MHz
CUE-REC
CUE-PB
FREQ GEN
ICB3 UPD71054GB-3 B4
ERS FREQ (40KHz)
BIAS FREQ (100KHz)
ICB7 RC4560M
CUE REC GAIN
CUE PB GAIN
LED RESET
BIAS FREQ EXIST
CUE OVER LEVEL
PB TC EXIST
TC LEVEL HIGH
TC LEVEL LOW
CUE REC PRE/VAR
CUE PB PRE/VAR
INPUT CHK
CUE ATT
CUE EE/PB
MONITOR MUTE
CUE IN SEL1
CUE IN SEL2
TC INPUT SEL
TC READ SEL2
TC RY CONT
CUE RY CONT
CTL RY CONT
TC REC
CUE REC
CTL REC
ALM RESET
WFM CTL OUT
BIAS ON
ERASE ON
OSC CONT
TC ERASE
CUE ERASE
FULL ERASE
TC READ SEL1
TC LINE OUT
PB TC D/T
WFM TC OUT
ALG SEL
SEL3
SEL2
SEL1
DLY
ICF5 SN74HCU04NS
ICJ4 M5238FP
ICJ5 M5238FP
ICD5 SN74HC08NS
CUE ERASE AMP
CUE ERASE CURRENT ADJUST
CUE ERASE VOLTAGE
CUE ERASE CURRENT 1
CUE ERASE CURRENT 2
CN311
CUE ERS HEAD (X)
CUE ERS HEAD (Y)
CUE ERS HEAD (G)
CUE ERASE
CUE E
ERASE ENVELOPE AMP
ERASE ENV
TC ERASE AMP
TC ERASE CURRENT ADJUST
TC ERASE VOLTAGE
TC ERASE CURRENT 1
TC ERASE CURRENT 2
TC ERS HEAD (X)
TC ERS HEAD (Y)
TC ERS HEAD (G)
TC ERASE
TC E
BIAS & ERC FREQ OSC
ERS FREQ(40KHz)
BIAS FREQ(100KHz)
BIAS OUT
FULL ERASE VOLTAGE
FULL ERASE CURRENT ADJUST
FULL ERASE CURRENT 1
FULL ERASE CURRENT 2
FULL ERS HEAD (X)
FULL ERS HEAD (Y)
FULL ERS HEAD (G)
FULL ERASE
CTL ERASE
CTL E
BIAS ENVELOPE AMP
BIAS ENV
BIAS OUT/ENV
CONTROL
15.36MHz
GAIN
+5V(D)
GND
-5V
+12V
-12V
TO +5V
TO -5V
TO +12V
TO +5V(A)
TO +6V
TO -12V
TO -6V
ICQ4 RC78L05A
ICR4 RC78L06A
ICR8 RC79L06A
ICB6 RC4560M
ICC8 TL431CLP
1/2

Control & Erase Block

AE-08 BOARD (2/2)

BOARD NO.1-634-500-11
HDV-10(J) ;#10001-10199
HDV-10(UC) ;#10001-10199
HDV-10(EK) ;#10001-10199

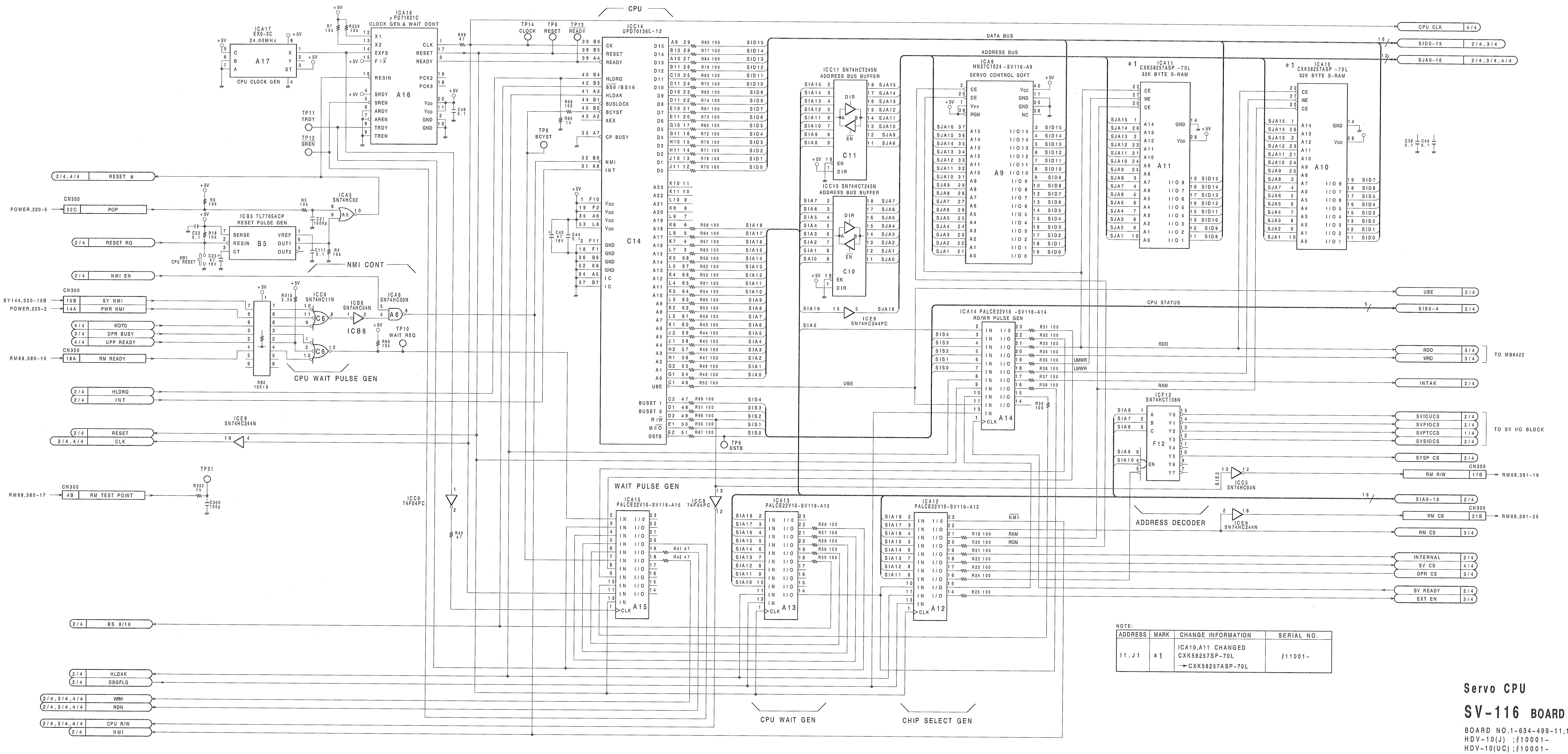
CPU
ICA17 EXO-3C 24.00MHz
A17
CPU CLOCK GEN
ICA16 μPD71621C CLOCK GEN.& WAIT CONT
A16
X1 X2 EXFS F/X RESIN SRDY SREN ARDY AREN TRDY TREN
CLK RESET READY PCK2 PCK3 VDD GND
TP14 CLOCK
TP6 RESET
TP13 READY
TP11 TRDY
TP12 SREN
TP8 BCYST
ICC14 UPD70136L-12
C14
CK RESET READY HLDRQ BS8/BS16 HLDAK BUSLOCK BCYST AEX CP BUSY NMI INT
D15 D14 D13 D12 D11 D10 D9 D8 D7 D6 D5 D4 D3 D2 D1 D0
A23 A22 A21 A20 A19 A18 A17 A16 A15 A14 A13 A12 A11 A10 A9 A8 A7 A6 A5 A4 A3 A2 A1 A0 UBE
BUSST 1 BUSST 0 R/W M/IO DSTB
TP9 DSTB
SID15 SID14 SID13 SID12 SID11 SID10 SID9 SID8 SID7 SID6 SID5 SID4 SID3 SID2 SID1 SID0
SIA18 SIA17 SIA16 SIA15 SIA14 SIA13 SIA12 SIA11 SIA10 SIA9 SIA8 SIA7 SIA6 SIA5 SIA4 SIA3 SIA2 SIA1 SIA0
SIS4 SIS3 SIS2 SIS1 SIS0
DATA BUS
ADDRESS BUS
ICC11 SN74HCT245N ADDRESS BUS BUFFER
C11
ICC10 SN74HCT245N ADDRESS BUS BUFFER
C10
DIR EN
ICE9 SN74HC244PC
ICA9 HN27C1024-SV116-A9 SERVO CONTROL SOFT
A9
CE OE VPP PGM
*1 ICA11 CXK58257ASP-70L 32K BYTE S-RAM
A11
*1 ICA10 CXK58257ASP-70L 32K BYTE S-RAM
A10
CE WE OE GND VDD
I/O 0 I/O 1 I/O 2 I/O 3 I/O 4 I/O 5 I/O 6 I/O 7 I/O 8
SJA0 SJA1 SJA2 SJA3 SJA4 SJA5 SJA6 SJA7 SJA8 SJA9 SJA10 SJA11 SJA12 SJA13 SJA14 SJA15 SJA16
SID0 SID1 SID2 SID3 SID4 SID5 SID6 SID7 SID8 SID9 SID10 SID11 SID12 SID13 SID14 SID15
CPU STATUS
ICA14 PALCE22V10-SV116-A14 RD/WR PULSE GEN
A14
UMWR LMWR
RDO
RAM
UBE
ICF12 SN74HCT138N
F12
ADDRESS DECODER
ICC5 SN74HC04N
ICE9 SN74HC244N
TO MB8422
TO SV I/O BLOCK
CPU CLK 4/4
SID0-15 2/4,3/4
SJA0-16 2/4,3/4,4/4
UBE 2/4
SIS0-4 2/4
RDO 3/4
WRD 3/4
INTAK 2/4
SVICUCS 2/4
SVPIOCS 2/4
SVPTCCS 1/4
SVSIOCS 2/4
SYSP CS 2/4
CN300 RM R/W 17B RM68,381-19
SIA0-18 2/4
CN300 RM CS 21B RM68,381-25
RM CS 3/4
INTERNAL 2/4
SV CS 4/4
DPR CS 3/4
SV READY 2/4
EXT EN 3/4
2/4,4/4 RESET *
POWER,220-5 CN300 22C POP
2/4 RESET RQ
ICA5 SN74HC02
A5
ICB5 TL7705ACP RESET PULSE GEN
B5
SENSE RESIN CT VREF OUT1 OUT2
SW1 CPU RESET
NMI CONT
2/4 NMI EN
SY144,320-15B CN300 15B SY NMI
POWER,220-2 14A PWR NMI
4/4 WDTO
3/4 DPR BUSY
4/4 UPP READY
RM68,380-10 CN300 18A RM READY
ICC6 SN74HC11N
C6
ICB6 SN74HC04N
ICB6
ICA6 SN74HC00N
A6
TP10 WAIT REQ
RB2 10K×8
CPU WAIT PULSE GEN
2/4 HLDRQ
2/4 INT
2/4 RESET
2/4,4/4 CLK
ICE9 SN74HC244N
TP31
RM68,380-17 CN300 4B RM TEST POINT
ICC9 74F04PC
WAIT PULSE GEN
ICA15 PALCE22V10-SV116-A15
A15
ICA13 PALCE22V10-SV116-A13
A13
ICA12 PALCE22V10-SV116-A12
A12
IN I/O CLK
NMI RAM ROM
2/4 BS 8/16
2/4 HLDAK
2/4 DBGFLG
2/4,3/4,4/4 WRN
2/4,3/4,4/4 RDN
2/4,3/4,4/4 CPU R/W
2/4 NMI
CPU WAIT GEN
CHIP SELECT GEN
A B C D E F G H I J K L
1 2 3 4 5

NOTE:

ADDRESS	MARK	CHANGE INFORMATION	SERIAL NO.
I1, J1	*1	ICA10,A11 CHANGED CXK58257SP-70L →CXK58257ASP-70L	#11001-

Servo CPU

SV-116 BOARD (1/4)

BOARD NO.1-634-499-11,12,13
HDV-10(J) ;#10001-
HDV-10(UC) ;#10001-
HDV-10(EK) ;#10001-

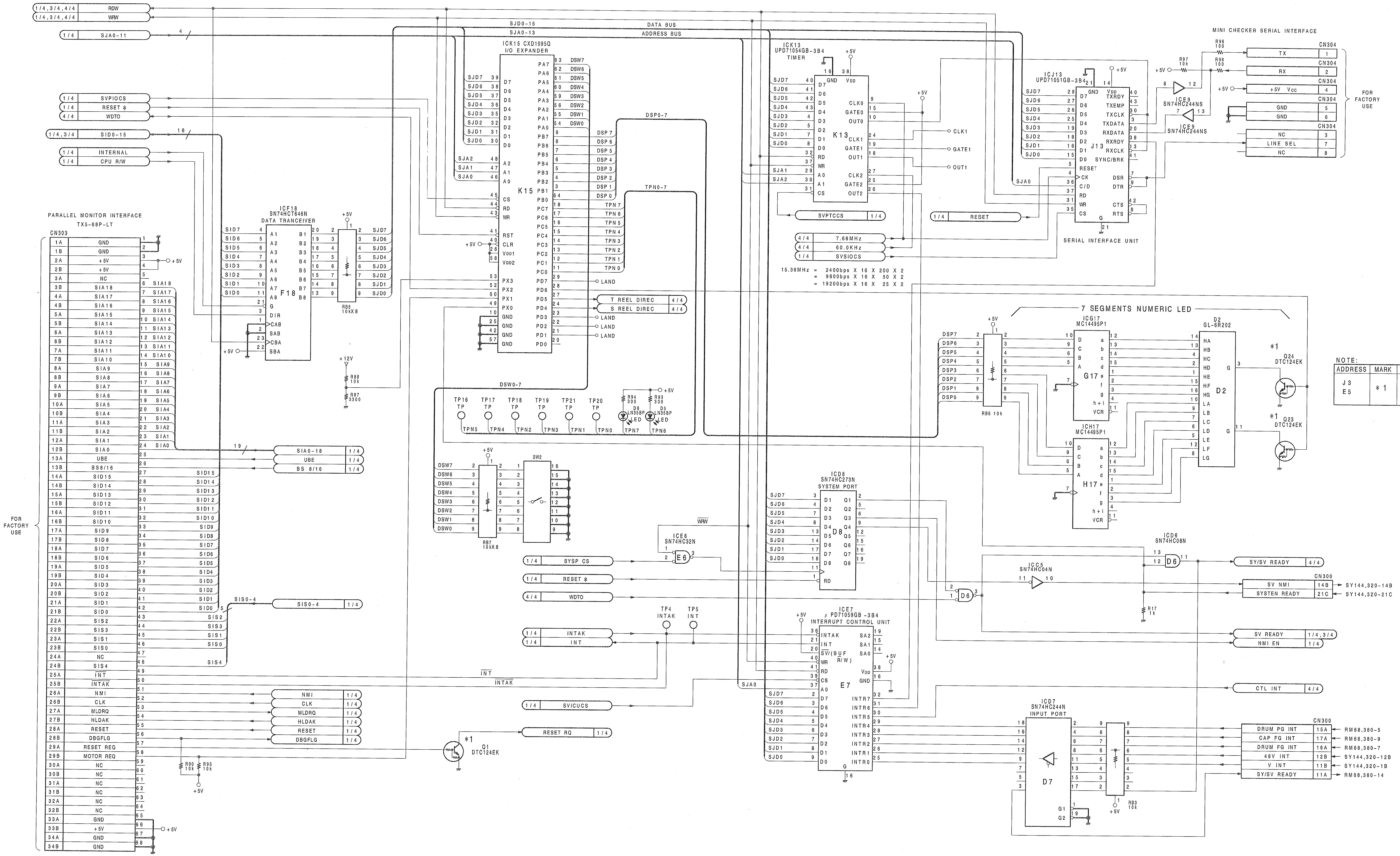
DATA BUS
ADDRESS BUS
SJD0-15
SJA0-13
RDW
WRW
SJA0-11
SVPIOCS
RESET *
WDTO
SID0-15
INTERNAL
CPU R/W
ICK15 CXD1095Q
IO EXPANDER
K15
DSP0-7
TPN0-7
DSW0-7
ICK13
UPD71054GB-3B4
TIMER
K13
CLK1
GATE1
OUT1
SVPTCCS
7.68MHz
60.0KHz
SVSIOCS
15.36MHz = 2400bps X 16 X 200 X 2
= 9600bps X 16 X 50 X 2
= 19200bps X 16 X 25 X 2
ICJ13
UPD71051GB-3B4
J13
SERIAL INTERFACE UNIT
MINI CHECKER SERIAL INTERFACE
CN304
TX
RX
+5V Vcc
GND
NC
LINE SEL
FOR FACTORY USE
ICE9
SN74HC244NS
ICF18
SN74HC7646N
DATA TRANCEIVER
F18
PARALLEL MONITOR INTERFACE
TX5-68P-LT
CN303
FOR FACTORY USE
SIA0-18
UBE
BS 8/16
SIS0-4
NMI
CLK
MLDRQ
HLDAK
RESET
DBGFLG
RESET REQ
MOTOR REQ
Q1
DTC124EK
T REEL DIREC
S REEL DIREC
LAND
TP16 TP17 TP18 TP19 TP21 TP20
D6 LN35BP LED
D5 LN35BP LED
SW2
R87 10kX8
7 SEGMENTS NUMERIC LED
ICG17
MC14495P1
G17
ICH17
MC14495P1
H17
D2
GL-5R202
Q24
DTC124EK
Q23
DTC124EK
ICD8
SN74HC273N
SYSTEM PORT
D8
ICE6
SN74HC32N
E6
SYSP CS
ICD6
SN74HC08N
D6
ICC5
SN74HC04N
SY/SV READY
CN300
SV NMI
SYSTEM READY
SY144,320-14B
SY144,320-21C
ICE7
μPD71059GB-3B4
INTERRUPT CONTROL UNIT
E7
TP4 INTAK
TP5 INT
INTAK
INT
SVICUCS
RESET RQ
SV READY
NMI EN
CTL INT
ICD7
SN74HC244N
INPUT PORT
D7
DRUM PG INT
CAP FG INT
DRUM FG INT
48V INT
V INT
SY/SV READY
RM68,380-5
RM68,380-9
RM68,380-7
SY144,320-12B
SY144,320-1B
RM68,380-14
R83 10k

NOTE:

ADDRESS	MARK	CHANGE INFORMATION	SERIAL NO.
J3 E5	*1	Q1,Q24,Q23 CHANGED DTC124ES → DTC124EK	#10401-

CPU Peripheral

SV-116 BOARD (2/4)

BOARD NO.1-634-499-11,12,13
HDV-10(J) ;#10001-
HDV-10(UC) ;#10001-
HDV-10(EK) ;#10001-

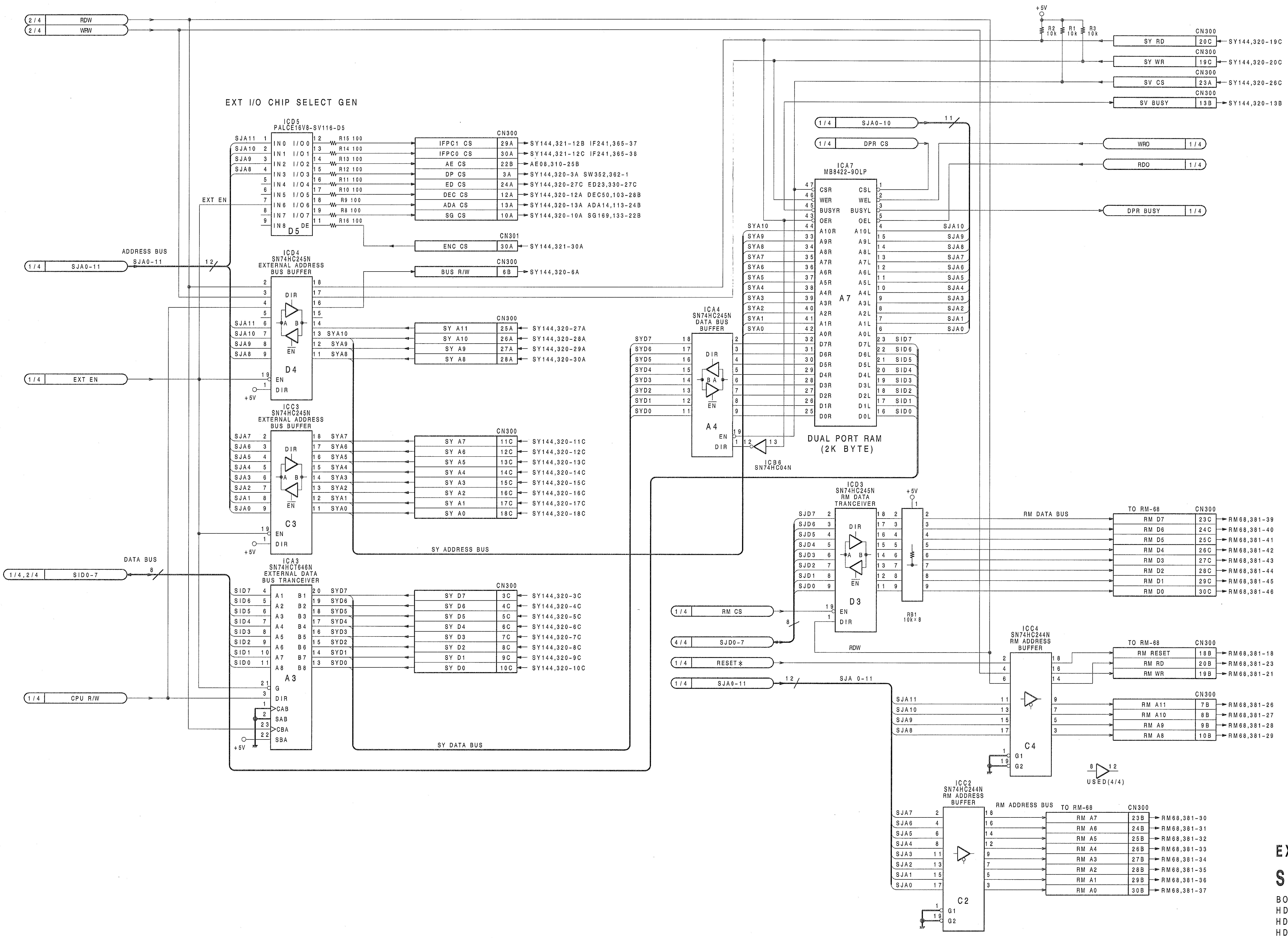
EXT I/O CHIP SELECT GEN
ICD5
PALCE16V8-SV116-D5
D5
IN0 IN1 IN2 IN3 IN4 IN5 IN6 IN7 IN8
I/O0 I/O1 I/O2 I/O3 I/O4 I/O5 I/O6 I/O7 OE
SJA11 SJA10 SJA9 SJA8
EXT EN
R15 100
R14 100
R13 100
R12 100
R11 100
R10 100
R9 100
R8 100
R16 100
CN300
IFPC1 CS 29A SY144,321-12B IF241,365-37
IFPC0 CS 30A SY144,321-12C IF241,365-38
AE CS 22B AE08,310-25B
DP CS 3A SY144,320-3A SW352,362-1
ED CS 24A SY144,320-27C ED23,330-27C
DEC CS 12A SY144,320-12A DEC50,103-28B
ADA CS 13A SY144,320-13A ADA14,113-24B
SG CS 10A SY144,320-10A SG169,133-22B
CN301
ENC CS 30A SY144,321-30A
CN300
BUS R/W 6B SY144,320-6A
2/4 RDW
2/4 WRW
ADDRESS BUS
1/4 SJA0-11
SJA0-11
12
ICD4
SN74HC245N
EXTERNAL ADDRESS
BUS BUFFER
D4
DIR
A B
EN
SJA11 SJA10 SJA9 SJA8
SYA10 SYA9 SYA8
CN300
SY A11 25A SY144,320-27A
SY A10 26A SY144,320-28A
SY A9 27A SY144,320-29A
SY A8 28A SY144,320-30A
1/4 EXT EN
+5V
ICC3
SN74HC245N
EXTERNAL ADDRESS
BUS BUFFER
C3
SJA7 SJA6 SJA5 SJA4 SJA3 SJA2 SJA1 SJA0
SYA7 SYA6 SYA5 SYA4 SYA3 SYA2 SYA1 SYA0
CN300
SY A7 11C SY144,320-11C
SY A6 12C SY144,320-12C
SY A5 13C SY144,320-13C
SY A4 14C SY144,320-14C
SY A3 15C SY144,320-15C
SY A2 16C SY144,320-16C
SY A1 17C SY144,320-17C
SY A0 18C SY144,320-18C
SY ADDRESS BUS
DATA BUS
1/4,2/4 SID0-7
8
ICA3
SN74HCT646N
EXTERNAL DATA
BUS TRANCEIVER
A3
A1 A2 A3 A4 A5 A6 A7 A8
B1 B2 B3 B4 B5 B6 B7 B8
G DIR CAB SAB CBA SBA
SID7 SID6 SID5 SID4 SID3 SID2 SID1 SID0
SYD7 SYD6 SYD5 SYD4 SYD3 SYD2 SYD1 SYD0
CN300
SY D7 3C SY144,320-3C
SY D6 4C SY144,320-4C
SY D5 5C SY144,320-5C
SY D4 6C SY144,320-6C
SY D3 7C SY144,320-7C
SY D2 8C SY144,320-8C
SY D1 9C SY144,320-9C
SY D0 10C SY144,320-10C
SY DATA BUS
1/4 CPU R/W
ICA4
SN74HC245N
DATA BUS
BUFFER
A4
EN
DIR
ICB6
SN74HC04N
+5V
R2 10k
R1 10k
R3 10k
CN300
SY RD 20C SY144,320-19C
SY WR 19C SY144,320-20C
SV CS 23A SY144,320-26C
SV BUSY 13B SY144,320-13B
1/4 SJA0-10
11
1/4 DPR CS
WRO 1/4
RDO 1/4
DPR BUSY 1/4
ICA7
MB8422-90LP
A7
CSR WER BUSYR OER
A10R A9R A8R A7R A6R A5R A4R A3R A2R A1R A0R
D7R D6R D5R D4R D3R D2R D1R D0R
CSL WEL BUSYL OEL
A10L A9L A8L A7L A6L A5L A4L A3L A2L A1L A0L
D7L D6L D5L D4L D3L D2L D1L D0L
SYA10 SYA9 SYA8 SYA7 SYA6 SYA5 SYA4 SYA3 SYA2 SYA1 SYA0
SJA10 SJA9 SJA8 SJA7 SJA6 SJA5 SJA4 SJA3 SJA2 SJA1 SJA0
SID7 SID6 SID5 SID4 SID3 SID2 SID1 SID0
DUAL PORT RAM
(2K BYTE)
ICD3
SN74HC245N
RM DATA
TRANCEIVER
D3
SJD7 SJD6 SJD5 SJD4 SJD3 SJD2 SJD1 SJD0
RB1
10k×8
RM DATA BUS
TO RM-66
CN300
RM D7 23C RM68,381-39
RM D6 24C RM68,381-40
RM D5 25C RM68,381-41
RM D4 26C RM68,381-42
RM D3 27C RM68,381-43
RM D2 28C RM68,381-44
RM D1 29C RM68,381-45
RM D0 30C RM68,381-46
1/4 RM CS
4/4 SJD0-7
1/4 RESET*
1/4 SJA0-11
SJA 0-11
RDW
ICC4
SN74HC244N
RM ADDRESS
BUFFER
C4
G1 G2
TO RM-66
CN300
RM RESET 18B RM68,381-18
RM RD 20B RM68,381-23
RM WR 19B RM68,381-21
CN300
SJA11 SJA10 SJA9 SJA8
RM A11 7B RM68,381-26
RM A10 8B RM68,381-27
RM A9 9B RM68,381-28
RM A8 10B RM68,381-29
USED(4/4)
ICC2
SN74HC244N
RM ADDRESS
BUFFER
C2
RM ADDRESS BUS
TO RM-66
CN300
SJA7 SJA6 SJA5 SJA4 SJA3 SJA2 SJA1 SJA0
RM A7 23B RM68,381-30
RM A6 24B RM68,381-31
RM A5 25B RM68,381-32
RM A4 26B RM68,381-33
RM A3 27B RM68,381-34
RM A2 28B RM68,381-35
RM A1 29B RM68,381-36
RM A0 30B RM68,381-37
1
2
3
4
5
A B C D E F G H

EXT.System Bus

SV-116 BOARD (3/4)

BOARD NO.1-634-499-11,12,13
HDV-10(J) ;#10001-
HDV-10(UC) ;#10001-
HDV-10(EK) ;#10001-

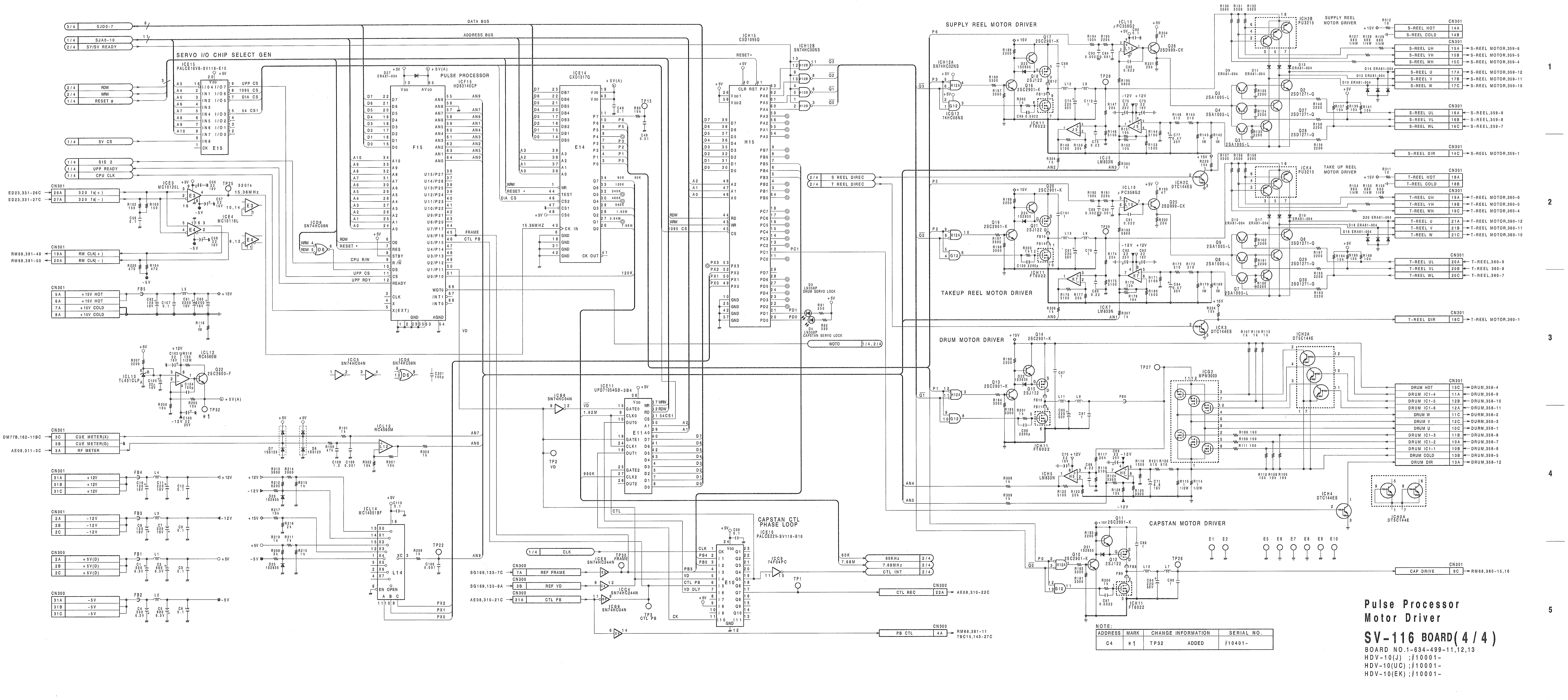
SERVO I/O CHIP SELECT GEN
PULSE PROCESSOR
SUPPLY REEL MOTOR DRIVER
TAKEUP REEL MOTOR DRIVER
DRUM MOTOR DRIVER
CAPSTAN MOTOR DRIVER
CAPSTAN CTL PHASE LOOP
DATA BUS
ADDRESS BUS
ICE15 PALCE16V8-SV116-E15
ICF15 HD63140CP
ICE14 CXD1317Q
ICH15 CXD1095Q
ICE11 UPD71054GB-3B4
ICE10 PALCE22V-SV116-E10
ICL14 MC14051BF
ICE3 MC10125L
ICE4 MC10116L
ICL12 RC4560M
ICL13 TL431CLP
ICG2 MPM3003
ICH2B PU3215
ICK4 PU3215
ICH4 DTC144ES
ICK3 DTC144ES
ICH2A DTC144E
ICL10 µPC358G2
ICJ5 LM833N
ICK7 LM833N
ICH5 LM833N
ICH11 FT6022
ICH12A SN74HC08NS
ICG12 74HC08NS
ICH12B SN74HC08NS
ICD6 SN74HC08N
ICC5 SN74HC04N
ICB5 SN74HC04N
ICE9 SN74HC244N
ICC4 SN74HC244N
ICB6 SN74HC04N
ICC9 74F04PC
SJD0-7
SJA0-10
SY/SV READY
RDW
WRW
RESET *
SV CS
SIS 2
UPP READY
CPU CLK
320 fH(+)
320 fH(-)
RM CLK(+)
RM CLK(-)
+15V HOT
+15V COLD
CUE METER(X)
CUE METER(G)
RF METER
+12V
-12V
+5V(D)
-5V
CLK
REF FRAME
REF VD
CTL PB
CTL REC
PB CTL
60KHz
7.68MHz
CTL INT
WDTO
S REEL DIREC
T REEL DIREC
S-REEL HOT
S-REEL COLD
S-REEL UH
S-REEL VH
S-REEL WH
S-REEL U
S-REEL V
S-REEL W
S-REEL UL
S-REEL VL
S-REEL WL
S-REEL DIR
T-REEL HOT
T-REEL COLD
T-REEL UH
T-REEL VH
T-REEL WH
T-REEL U
T-REEL V
T-REEL W
T-REEL UL
T-REEL VL
T-REEL WL
T-REEL DIR
DRUM HOT
DRUM IC1-4
DRUM IC1-5
DRUM IC1-6
DRUM W
DRUM V
DRUM U
DRUM IC1-3
DRUM IC1-2
DRUM IC1-1
DRUM COLD
DRUM DIR
CAP DRIVE
CN301
CN300
ED23,331-26C
ED23,331-27C
RM68,381-49
RM68,381-50
DM77B,162-11BC
AE08,311-3C
SG169,133-7C
SG169,133-8A
AE08,310-21C
AE08,310-22C
RM68,381-11
TBC15,143-27C
RM68,380-15,16
S-REEL MOTOR,359-1
T-REEL MOTOR,360-1
D3 LN358P DRUM SERVO LOCK
D4 LN358P CAPSTAN SERVO LOCK
TP2 VD
TP22
TP25 320fH 15.36MHz
TP30 FRAME
TP3 CTL PB
TP1
TP26
TP27
TP28
TP29
TP32
E1 E2 E5 E6 E7 E8 E9 E10
A B C D E F G H I J K L
1 2 3 4 5

NOTE:

ADDRESS	MARK	CHANGE INFORMATION	SERIAL NO.
C4	*1	TP32 ADDED	#10401-

Pulse Processor
Motor Driver

SV-116 BOARD(4/4)

BOARD NO.1-634-499-11,12,13
HDV-10(J) ;#10001-
HDV-10(UC) ;#10001-
HDV-10(EK) ;#10001-

S/N;10901 and higher

CONTROL BUS
ADDRESS BUS A0-11
DATA BUS D0-7
BUFFER
IC2A SN74HC541NS
BUFFER
IC2B SN74HC541NS
ADDRESS BUS BUFFER
IC2L SN74HC541NS
DATA BUS TRANCEIVER
IC2M SN74HC245NS
RM-68 I/O CHIP SELECT GEN
IC6G PAL16L8
A/D CONV&PULSE PROCESSOR
IC7E HD63140CP
HD63140CP
PWM D/A CONVERTER&CLOCK GEN
IC4J CXD1317Q
PARALLEL I/O
IC7C CXD1095Q
CLOCK DUTY COMP
ECL→TTL
ANALOG SWITCH
IC8G MC74HC4051F
ANALOG SWITCH
IC8H MC74HC4051F
128WORD x 16BIT NOVRAM
IC8C CXK1009P
SHUTDOWN SWITCH
I SENSE
TEN BIAS
TEN OFFSET
THRESHOLD
CAP DRIVE
SW SENSE
7.5kHz
PIO PA
LAMP
POWER CONT
DRUM PG(A)
DRUM FG(A)
AD IN
FG PULSE
CAPSTAN SPEED DET
CAPSTAN FG COUNT CLOCK GEN
DRUM ADV-V GEN
DRUM SPEED DET
DRUM PG PHASE DET
DRUM FG FREQ DET
CAPSTAN FG INT PULSE GEN
DRUM FG INT PULSE GEN
CAPSTAN/T-REEL FG CLOCK GEN DIRECTION DETECTOR
TIMER CK
WINDOW TRIG
CLOCK
PB/REC
DIRECTION
COUNTPULSE
REF FRAME
CAP DIR
TR DIR
TM-31 BOARD
1-641-631-11
CN381
+15V HOT
+15V COLD

Servo Sub Controller

RM-68 BOARD (1/2)

BOARD NO.1-634-504-13

TM-31 BOARD

HDV-10(J) ;#10901-
HDV-10(UC) ;#10901-
HDV-10(EK) ;#10901-

S/N;10001 through 10899

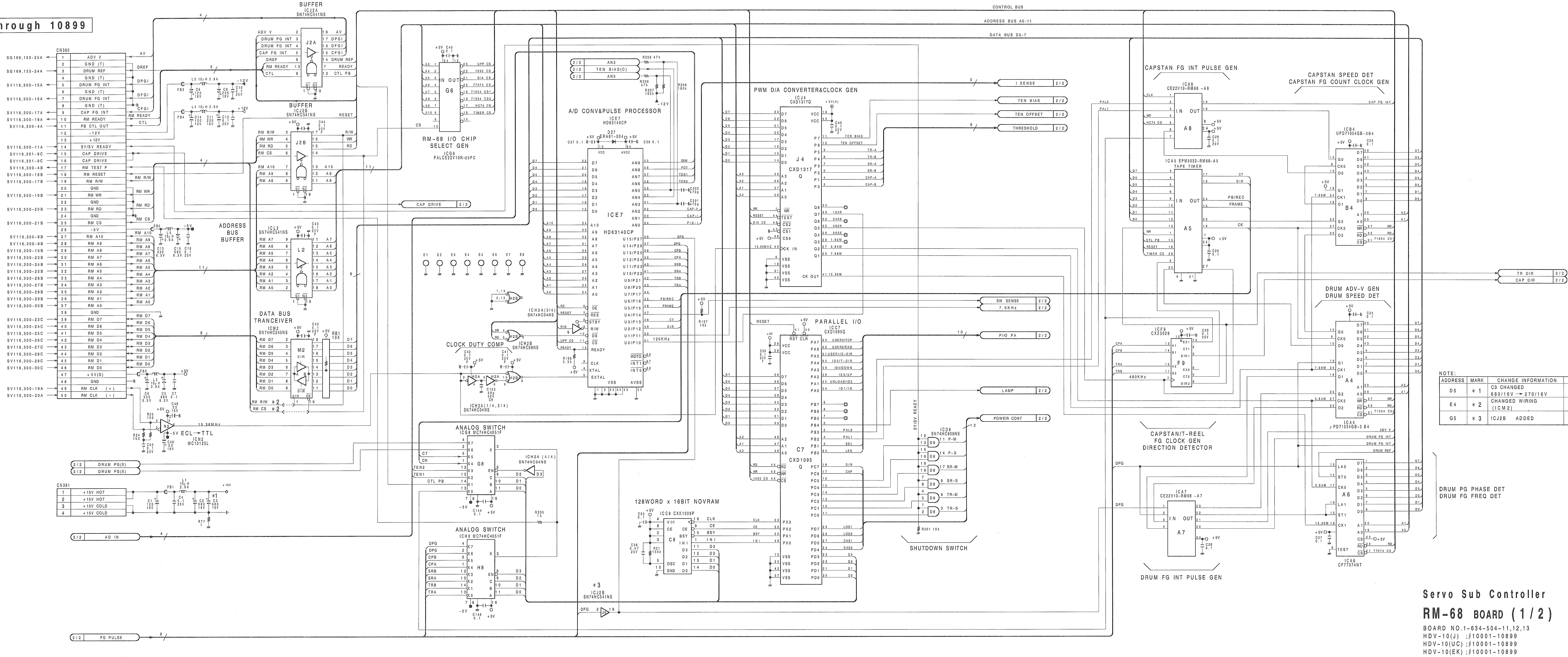
BUFFER
CN380
CN381
BUFFER
ADDRESS BUS BUFFER
DATA BUS TRANCEIVER
RM-68 I/O CHIP SELECT GEN
A/D CONV&PULSE PROCESSOR
CLOCK DUTY COMP
ECL→TTL
ANALOG SWITCH
ANALOG SWITCH
128WORD x 16BIT NOVRAM
CONTROL BUS
ADDRESS BUS A0-11
DATA BUS D0-7
PWM D/A CONVERTER&CLOCK GEN
PARALLEL I/O
SHUTDOWN SWITCH
I SENSE
TEN BIAS
TEN OFFSET
THRESHOLD
CAP DRIVE
SW SENSE
7.6MHz
PIO PA
LAMP
POWER CONT
DRUM FG(X)
DRUM PG(X)
AD IN
FG PULSE
CAPSTAN FG INT PULSE GEN
CAPSTAN SPEED DET
CAPSTAN FG COUNT CLOCK GEN
TAPE TIMER
TR DIR
CAP DIR
DRUM ADV-V GEN
DRUM SPEED DET
CAPSTAN/T-REEL FG CLOCK GEN DIRECTION DETECTOR
DRUM PG PHASE DET
DRUM FG FREQ DET
DRUM FG INT PULSE GEN

NOTE:

ADDRESS	MARK	CHANGE INFORMATION	SERIAL NO.
D5	∗ 1	C3 CHANGED 680/16V → 270/16V	#10101-
E4	∗ 2	CHANGED WIRING (ICM2)	#10001-#10099
G5	∗ 3	ICJ2B ADDED	#10401-

Servo Sub Controller

RM-68 BOARD (1/2)

BOARD NO.1-634-504-11,12,13
HDV-10(J) ;#10001-10899
HDV-10(UC) ;#10001-10899
HDV-10(EK) ;#10001-10899

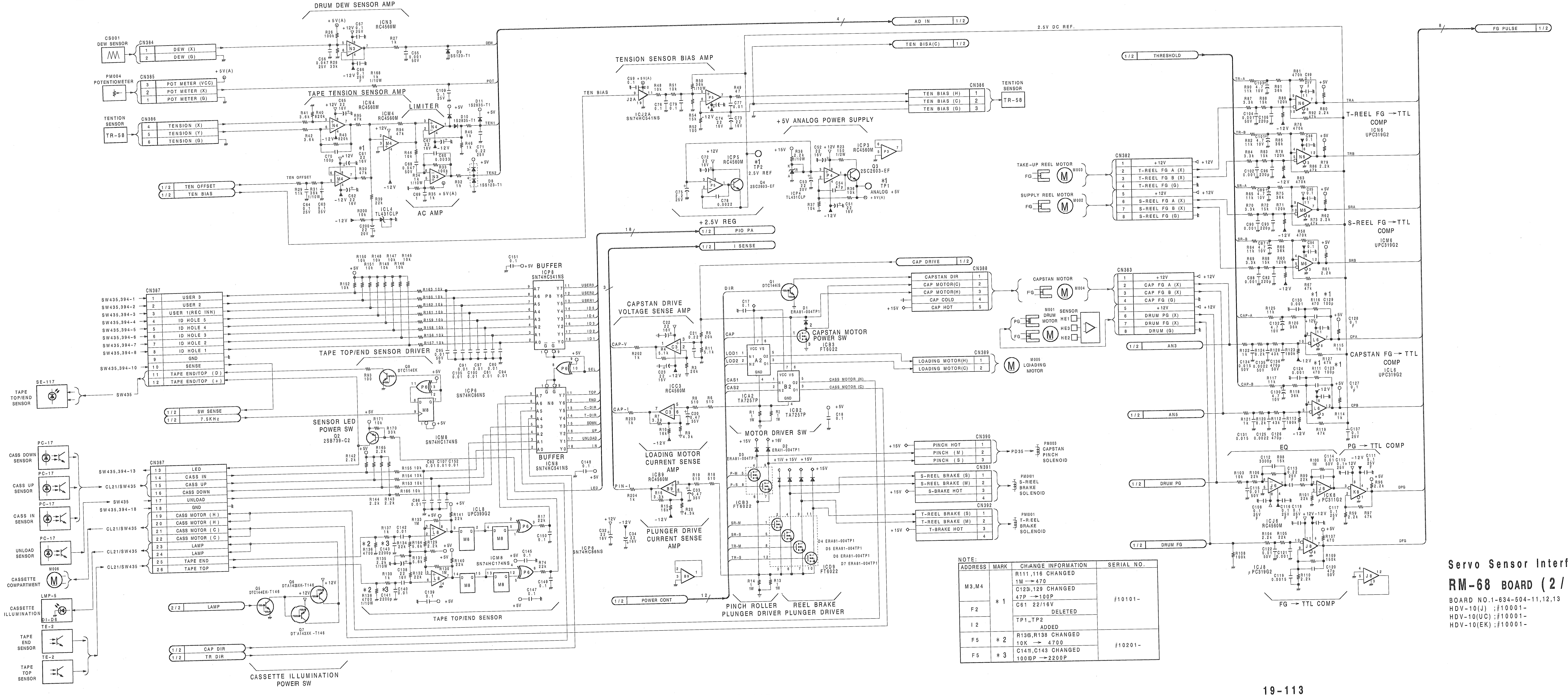
DRUM DEW SENSOR AMP
CS001 DEW SENSOR
PM004 POTENTIOMETER
TENTION SENSOR
TR-58
TAPE TENSION SENSOR AMP
LIMITER
AC AMP
TEN OFFSET
TEN BIAS
TENSION SENSOR BIAS AMP
+5V ANALOG POWER SUPPLY
+2.5V REG
PIO PA
I SENSE
AD IN
TEN BIAS(C)
2.5V DC REF.
FG PULSE
THRESHOLD
T-REEL FG → TTL COMP
S-REEL FG → TTL COMP
CAPSTAN FG → TTL COMP
PG → TTL COMP
FG → TTL COMP
EQ
TAKE-UP REEL MOTOR
SUPPLY REEL MOTOR
CAPSTAN MOTOR
DRUM MOTOR
LOADING MOTOR
CAP DRIVE
CAPSTAN DRIVE VOLTAGE SENSE AMP
CAPSTAN MOTOR POWER SW
LOADING MOTOR CURRENT SENSE AMP
PLUNGER DRIVE CURRENT SENSE AMP
MOTOR DRIVER SW
PINCH ROLLER PLUNGER DRIVER
REEL BRAKE PLUNGER DRIVER
CAPSTAN PINCH SOLENOID
S-REEL BRAKE SOLENOID
T-REEL BRAKE SOLENOID
POWER CONT
DRUM PG
DRUM FG
AN3
AN5
BUFFER
TAPE TOP/END SENSOR DRIVER
SENSOR LED POWER SW
TAPE TOP/END SENSOR
SW SENSE
7.5KHz
LAMP
CAP DIR
TR DIR
CASSETTE ILLUMINATION POWER SW
SE-117 TAPE TOP/END SENSOR
CASS DOWN SENSOR
CASS UP SENSOR
CASS IN SENSOR
UNLOAD SENSOR
CASSETTE COMPARTMENT
CASSETTE ILLUMINATION
TAPE END SENSOR
TAPE TOP SENSOR
CN384
CN385
CN386
CN387
CN382
CN383
CN388
CN389
CN390
CN391
CN392

NOTE:

ADDRESS	MARK	CHANGE INFORMATION	SERIAL NO.
M3,M4	＊1	R111,116 CHANGED 1M → 470	#10101-
		C123,129 CHANGED 47P → 100P	
F2		C61 22/16V DELETED	
I2		TP1,TP2 ADDED	
F5	＊2	R136,R138 CHANGED 10K → 4700	#10201-
F5	＊3	C141,C143 CHANGED 1000P → 2200P	

Servo Sensor Interface

RM-68 BOARD (2/2)

BOARD NO.1-634-504-11,12,13
HDV-10(J) ;#10001-
HDV-10(UC) ;#10001-
HDV-10(EK) ;#10001-

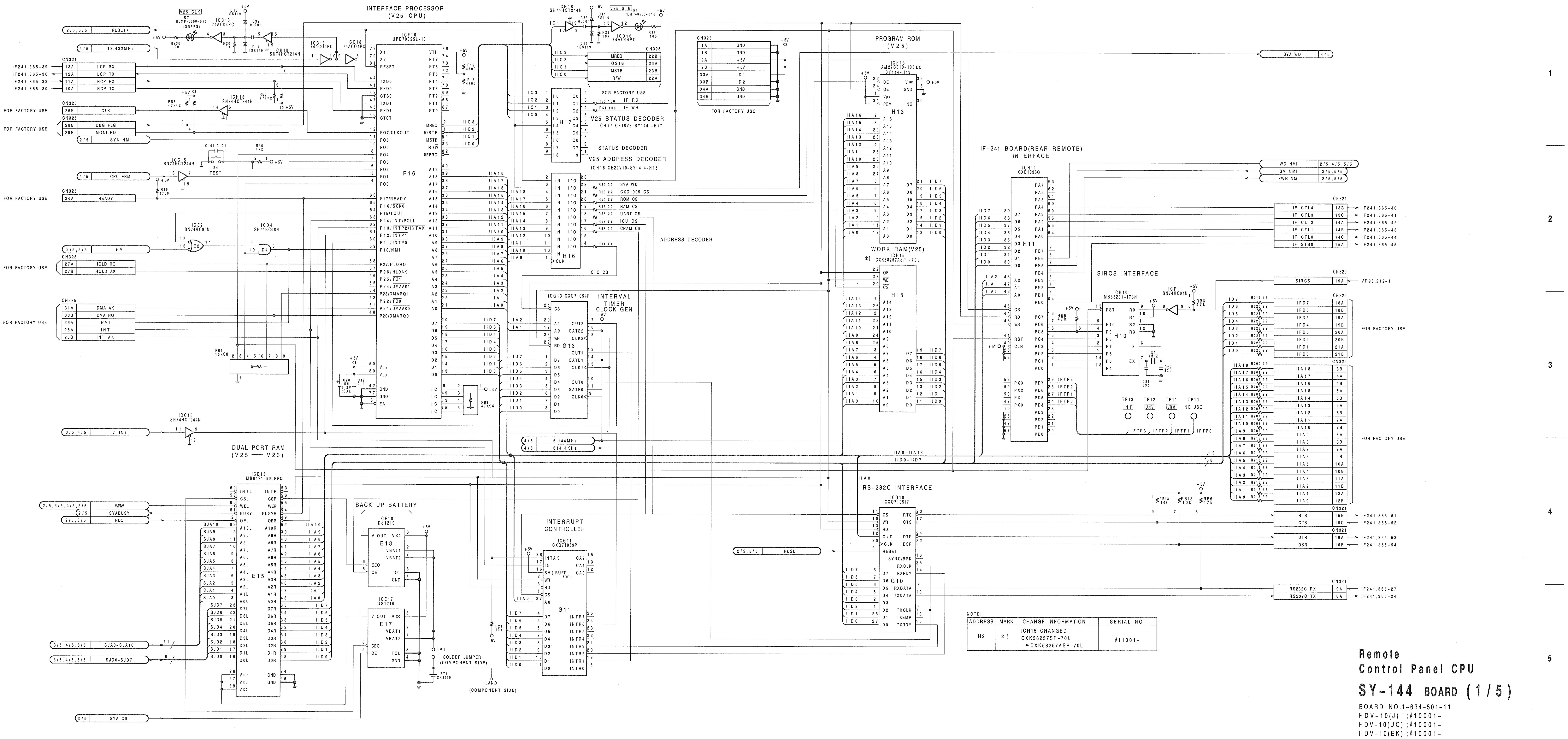
INTERFACE PROCESSOR
(V25 CPU)
ICF16 UPD70325L-10
F16
V25 STATUS DECODER
ICH17 CE16V8-SY144-H17
STATUS DECODER
V25 ADDRESS DECODER
ICH16 CE22V10-SY144-H16
ADDRESS DECODER
PROGRAM ROM
(V25)
ICH13 AM27C010-105DC SY144-H13
H13
WORK RAM(V25)
*1 ICH15 CXK58257ASP-70L
H15
IF-241 BOARD(REAR REMOTE)
INTERFACE
ICH11 CXD1095Q
H11
SIRCS INTERFACE
ICH10 MB88201-173N
H10
INTERVAL TIMER CLOCK GEN
ICG13 CXQ71054P
G13
DUAL PORT RAM
(V25 → V23)
ICE15 MB8421-90LPFQ
E15
BACK UP BATTERY
ICE18 DS1210
E18
ICE17 DS1210
E17
SOLDER JUMPER (COMPONENT SIDE)
LAND (COMPONENT SIDE)
INTERRUPT CONTROLLER
ICG11 CXQ71059P
G11
RS-232C INTERFACE
ICG10 CXQ71051P
G10
FOR FACTORY USE
CN321
CN325
CN320
RESET*
18.432MHz
SYA WD
WD NMI
SV NMI
PWR NMI
SIRCS
VR93,212-1
6.144MHz
614.4KHz
V INT
NMI
WRW
SYABUSY
RDO
SJA0-SJA10
SJD0-SJD7
SYA CS
TP13
TP12
TP11
TP10
NO USE
1
2
3
4
5

NOTE:

ADDRESS	MARK	CHANGE INFORMATION	SERIAL NO.
H2	*1	ICH15 CHANGED CXK58257SP-70L →CXK58257ASP-70L	#11001-

Remote
Control Panel CPU

SY-144 BOARD (1/5)

BOARD NO.1-634-501-11
HDV-10(J) ;#10001-
HDV-10(UC) ;#10001-
HDV-10(EK) ;#10001-

A B C D E F G H I J K L

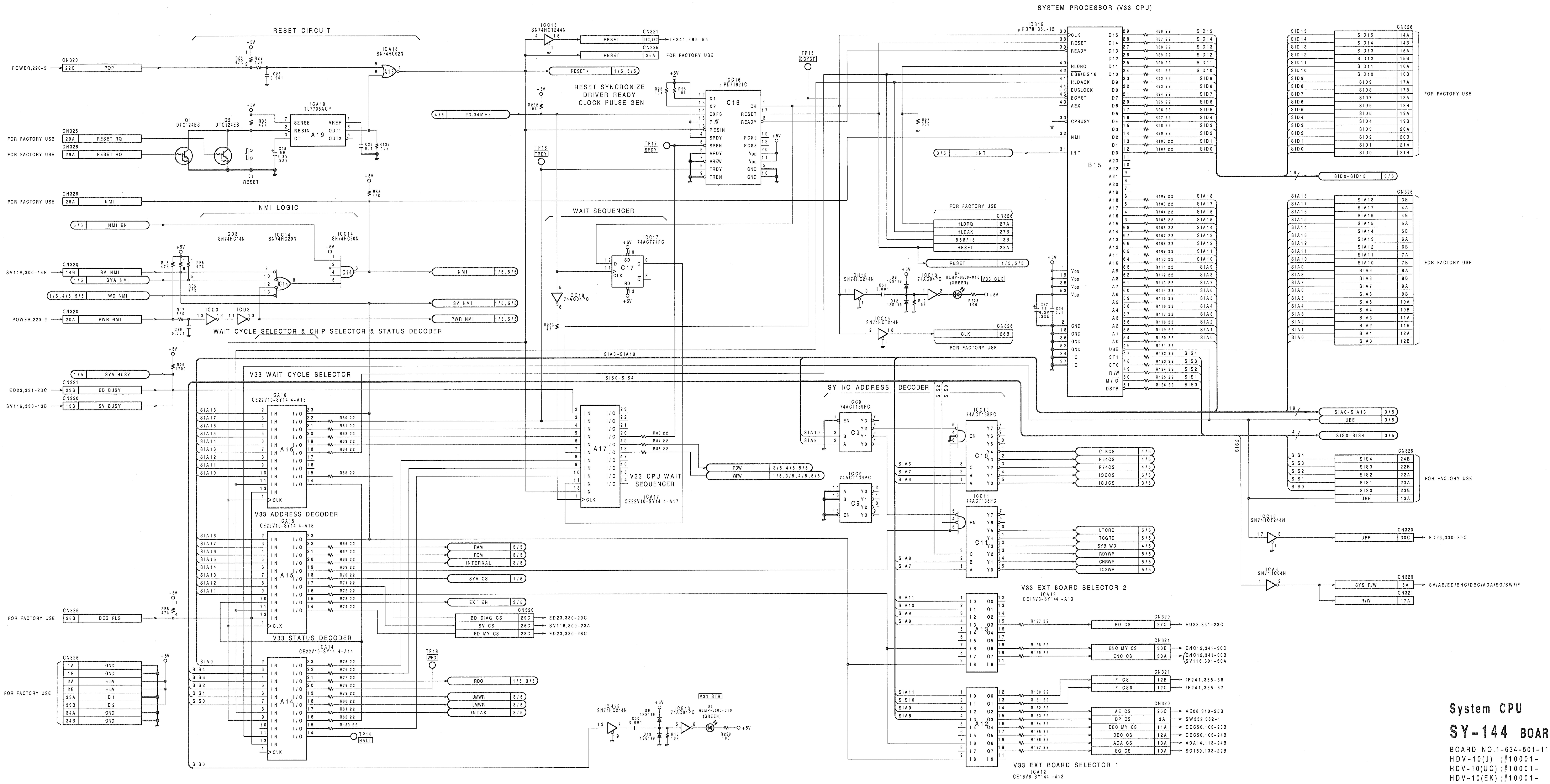
SYSTEM PROCESSOR (V33 CPU)
RESET CIRCUIT
RESET SYNCRONIZE
DRIVER READY
CLOCK PULSE GEN
NMI LOGIC
WAIT SEQUENCER
WAIT CYCLE SELECTOR & CHIP SELECTOR & STATUS DECODER
V33 WAIT CYCLE SELECTOR
V33 CPU WAIT SEQUENCER
V33 ADDRESS DECODER
V33 STATUS DECODER
SY I/O ADDRESS DECODER
V33 EXT BOARD SELECTOR 2
V33 EXT BOARD SELECTOR 1
FOR FACTORY USE
POWER,220-5
POWER,220-2
SV116,300-14B
ED23,331-23C
SV116,330-13B
IC815 μPD70136L-12
ICC16 μPD71011C
ICA19 TL7705ACP
ICA16 CE22V10-SY14 4-A16
ICA17 CE22V10-SY14 4-A17
ICA15 CE22V10-SY14 4-A15
ICA14 CE22V10-SY14 4-A14
ICA13 CE16V8-SY144-A13
ICA12 CE16V8-SY144-A12
ICC17 74ACT74PC
ICC9 74ACT139PC
ICC10 74ACT138PC
ICC11 74ACT138PC
ICC15 SN74HCT244N
ICA18 SN74HC02N
ICD3 SN74HC14N
ICC14 SN74HC20N
ICA4 SN74HC04N
SID0-SID15
SIA0-SIA18
SIS0-SIS4
UBE
CN320
CN321
CN325
CN326
1
2
3
4
5

System CPU

SY-144 BOARD (2/5)

BOARD NO.1-634-501-11
HDV-10(J) ;#10001-
HDV-10(UC) ;#10001-
HDV-10(EK) ;#10001-

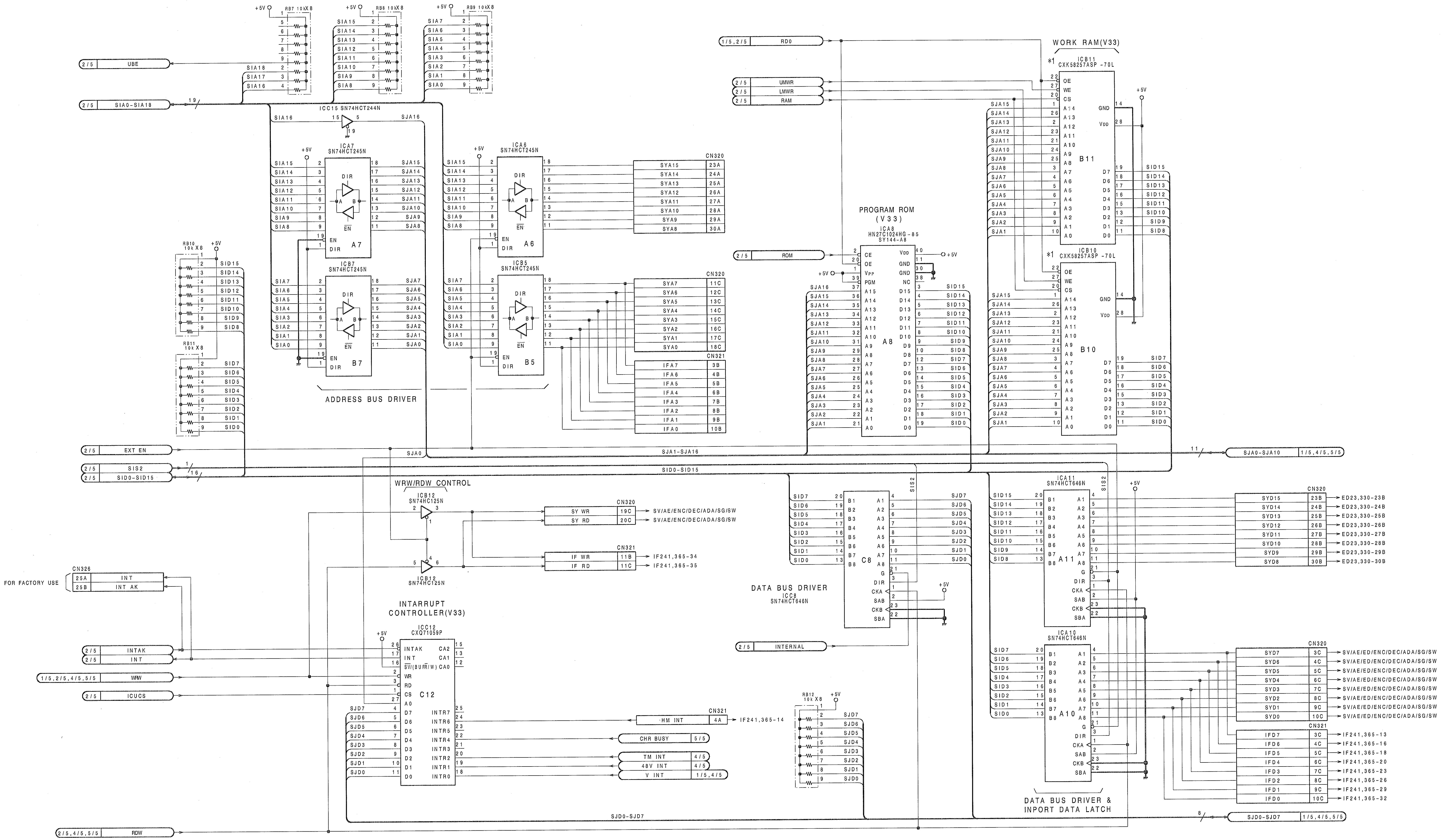
ADDRESS BUS DRIVER
ICC15 SN74HCT244N
ICA7 SN74HCT245N
ICB7 SN74HCT245N
ICA6 SN74HCT245N
ICB5 SN74HCT245N
A7
B7
A6
B5
CN320
CN321
CN326
FOR FACTORY USE
INT
INT AK
UBE
SIA0-SIA18
SIS2
SID0-SID15
EXT EN
SJA1-SJA16
SJA0
WRW/RDW CONTROL
ICB12 SN74HC125N
SY WR
SY RD
IF WR
IF RD
SV/AE/ENC/DEC/ADA/SG/SW
IF241,365-34
IF241,365-35
INTARRUPT CONTROLLER(V33)
ICC12 CXQ71059P
C12
INTAK
INT
WRW
ICUCS
RDW
HM INT
CHR BUSY
TM INT
48V INT
V INT
IF241,365-14
SJD0-SJD7
RB7 10kX8
RB8 10kX8
RB9 10kX8
RB10 10kX8
RB11 10kX8
RB12 10kX8
PROGRAM ROM (V33)
ICA8 HN27C1024HG-85 SY144-A8
A8
RD0
UMWR
LMWR
RAM
ROM
WORK RAM(V33)
*1 ICB11 CXK58257ASP-70L
B11
*1 ICB10 CXK58257ASP-70L
B10
SJA0-SJA10
DATA BUS DRIVER
ICC8 SN74HCT646N
C8
INTERNAL
ICA11 SN74HCT646N
A11
ICA10 SN74HCT646N
A10
DATA BUS DRIVER & INPORT DATA LATCH
ED23,330-23B
ED23,330-24B
ED23,330-25B
ED23,330-26B
ED23,330-27B
ED23,330-28B
ED23,330-29B
ED23,330-30B
IF241,365-13
IF241,365-16
IF241,365-18
IF241,365-20
IF241,365-23
IF241,365-26
IF241,365-29
IF241,365-32
1/5,4/5,5/5

NOTE:

ADDRESS	MARK	CHANGE INFORMATION	SERIAL NO.
G1,G2	*1	ICB10,B11 CHANGED CXK58257SP-70L →CXK58257ASP-70L	#11001-

Memory

SY-144 BOARD (3/5)

BOARD NO.1-634-501-11
HDV-10(J) ;#10001-
HDV-10(UC) ;#10001-
HDV-10(EK) ;#10001-

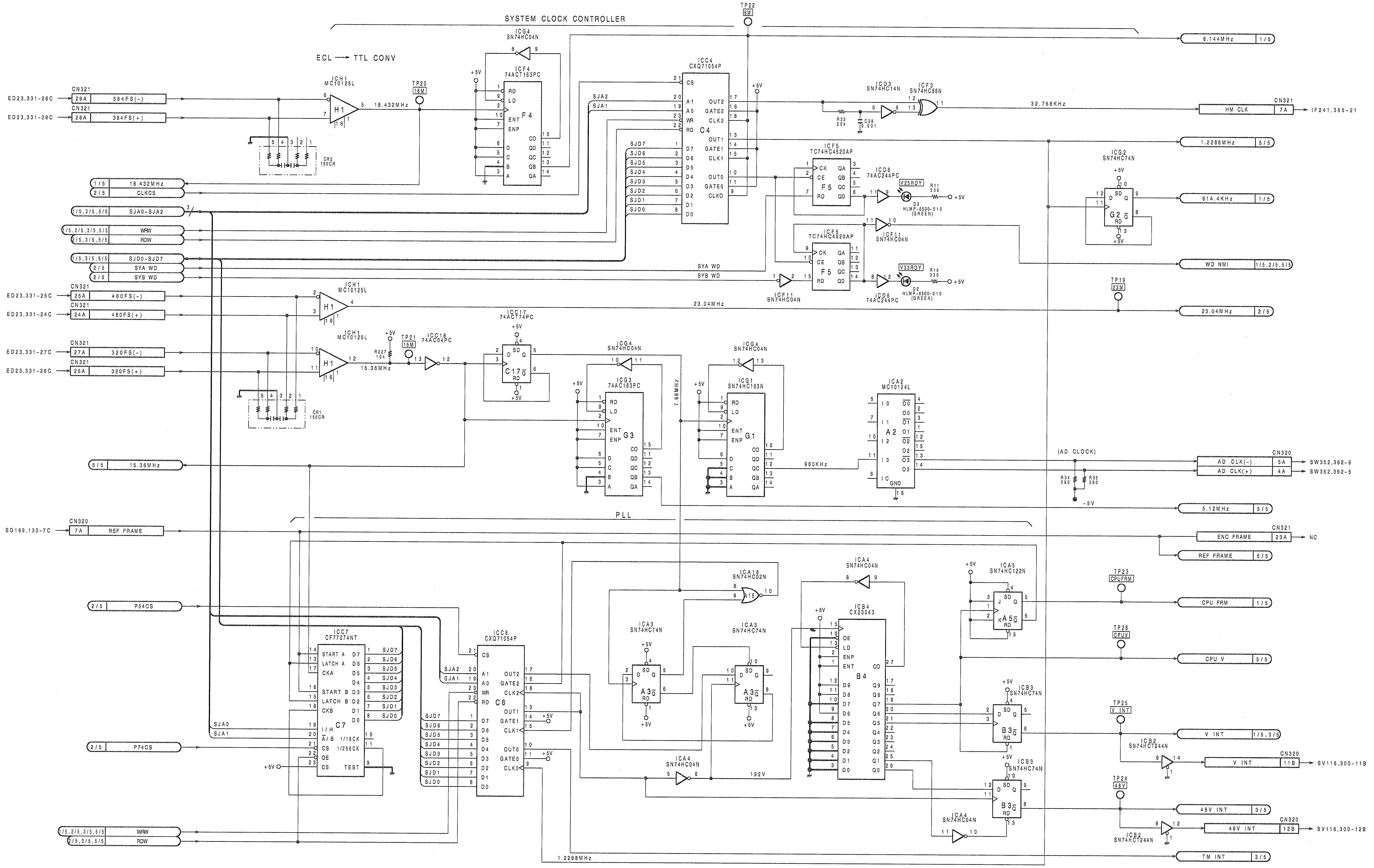
SYSTEM CLOCK CONTROLLER
ECL → TTL CONV
ED23,331-28C
ED23,331-29C
CN321
29A 384FS(-)
28A 384FS(+)
ICH1 MC10125L
H1
18.432MHz
TP20 18M
ICG4 SN74HC04N
ICF4 74ACT163PC
F4
ICC4 CXQ71054P
C4
TP22 6M
ICD3 SN74HC14N
ICF3 SN74HC86N
R33 20k
C28 0.001
32.768KHz
HM CLK
7A
IF241,365-21
6.144MHz 1/5
1.2288MHz 5/5
ICF5 TC74HC4520AP
F5
ICD6 74AC244PC
V25RDY
D3 HLMP-6500-010 (GREEN)
R11 330
+5V
ICG2 SN74HC74N
G2
614.4KHz 1/5
ICF11 SN74HC04N
V33RDY
D2 HLMP-6500-010 (GREEN)
R14 330
WD NMI 1/5,2/5,5/5
1/5 18.432MHz
2/5 CLKCS
1/5,3/5,5/5 SJA0-SJA2
1/5,2/5,3/5,5/5 WRW
2/5,3/5,5/5 RDW
1/5,3/5,5/5 SJD0-SJD7
2/5 SYA WD
2/5 SYB WD
SJA2
SJA1
SJD7 SJD6 SJD5 SJD4 SJD3 SJD2 SJD1 SJD0
CR2 150CR
ED23,331-25C
ED23,331-24C
25A 480FS(-)
24A 480FS(+)
23.04MHz
TP19 23M
23.04MHz 2/5
ED23,331-27C
ED23,331-26C
27A 320FS(-)
26A 320FS(+)
CR1 150CR
15.36MHz
R227 10k
TP21 15M
ICC18 74AC04PC
ICC17 74ACT74PC
C17
ICG3 74AC163PC
G3
ICG1 SN74HC163N
G1
7.68MHz
ICA2 MC10124L
A2
960KHz
(AD CLOCK)
AD CLK(-) 5A
AD CLK(+) 4A
CN320
SW352,362-6
SW352,362-5
R34 390
R35 390
-5V
5/5 15.36MHz
5.12MHz 5/5
PLL
SG169,133-7C
CN320 7A REF FRAME
ENC FRAME 23A
NC
REF FRAME 5/5
ICA18 SN74HC02N
ICA4 SN74HC04N
ICA3 SN74HC74N
A3
ICB4 CX23043
B4
ICA5 SN74HC122N
A5
TP23 CPUFRM
CPU FRM 1/5
TP26 CPUV
CPU V 5/5
ICB3 SN74HC74N
B3
TP25 V INT
V INT 1/5,3/5
ICB2 SN74HCT244N
V INT 11B
SV116,300-11B
TP24 48V
48V INT 3/5
48V INT 12B
SV116,300-12B
TM INT 3/5
192V
1.2288MHz
2/5 P54CS
ICC7 CF77074NT
C7
ICC6 CXQ71054P
C6
SJA0
SJA1
2/5 P74CS
1/5,2/5,3/5,5/5 WRW
2/5,3/5,5/5 RDW

PLL,System Clock

SY-144 BOARD (4/5)

BOARD NO.1-634-501-11
HDV-10(J) ;#10001-
HDV-10(UC) ;#10001-
HDV-10(EK) ;#10001-

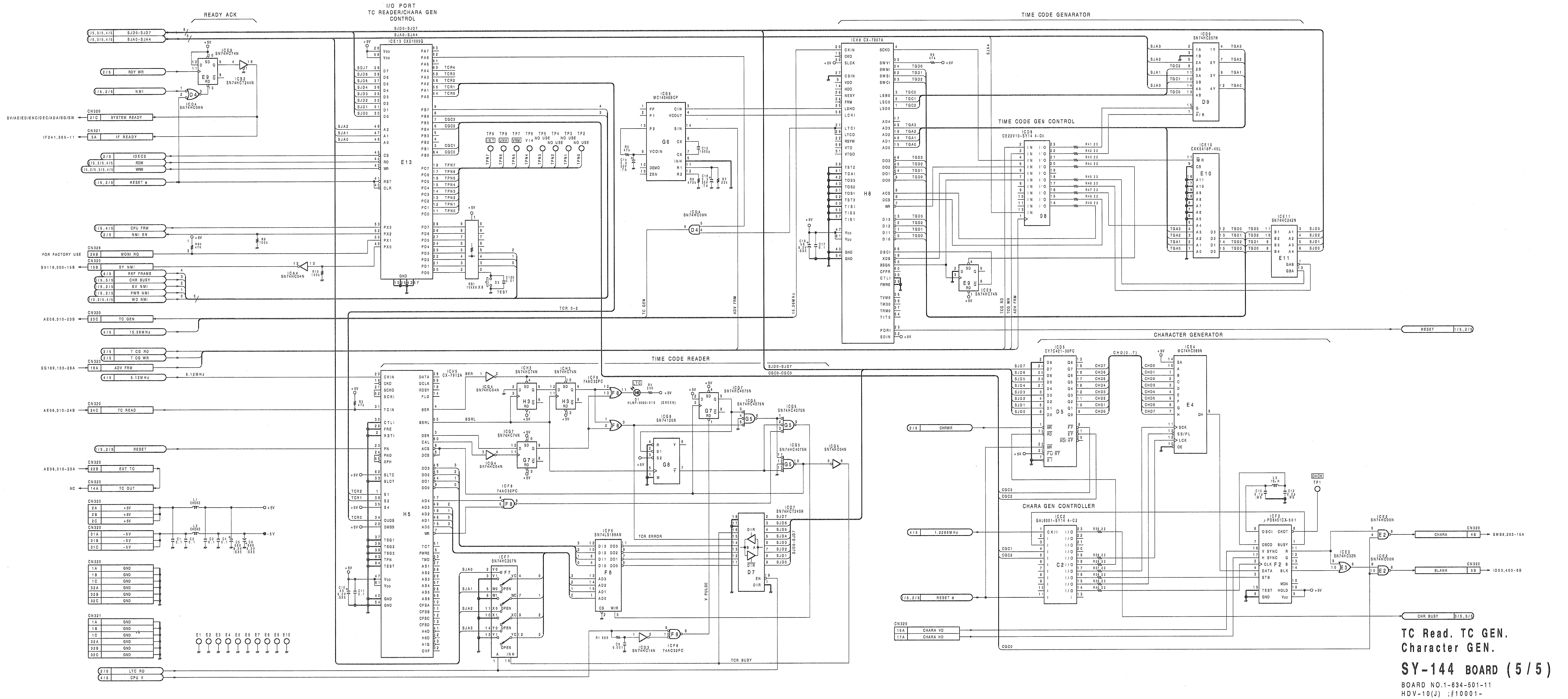
READY ACK
I/O PORT
TC READER/CHARA GEN
CONTROL
TIME CODE GENARATOR
TIME CODE GEN CONTROL
CHARACTER GENERATOR
TIME CODE READER
CHARA GEN CONTROLLER
IC E13 CXD1095Q
IC H8 CX-7907A
IC D9 SN74HC257N
IC D8 CE22V10-SY14 4-D3
IC E10 CXK5416P-45L
IC E11 SN74HC242N
IC G6 MC14046BCP
IC H5 CX-7912A
IC D5 CY7C421-30PC
IC E4 MC74HC589N
IC C2 GAL6001-SY14 4-C2
IC F2 μPD6451CX-501
IC F6 SN74LS189AN
IC F7 SN74HC257N
IC D7 SN74HCT245N
IC G8 SN74120N
SYSTEM READY
IF READY
CPU FRM
NMI EN
MONI RD
SY NMI
TC GEN
15.36MHz
T CG RD
T CG WR
ADV FRM
5.12MHz
TC READ
RESET
EXT TC
TC OUT
+5V
-5V
GND
CHRWR
1.2288MHz
RESET #
CHARA VD
CHARA HD
CHARA
BLANK
CHR BUSY
LTC RD
CPU V
TCR ERROR
TCR BUSY
1
2
3
4
5

TC Read. TC GEN.
Character GEN.

SY-144 BOARD (5/5)

BOARD NO.1-634-501-11
HDV-10(J) ;#10001-
HDV-10(UC) ;#10001-
HDV-10(EK) ;#10001-

IF-241 REMOTE SELECTOR
IC4 PALCE22V10-IF241-B2
IF-241 ADDRESS DECODER
IC12 PALCE22V10-IF241-D4
IC8 LT1081CN
IC6 LT1081CN
IC11 MC74HC4053F
IC7 MC34051P
IC9 MC34051P
IC3 MC34051P
IC2 MC34051P
IC1 MC34051P
IC18 SN74HC541NS
IC14 MBM2212-20P
IC13 MBM2212-20P
IC17 SN74HC245NS
IC16 SN74HC273N
IC20 (1/2) MC74HC4538AN
IC20 (2/2) MC74HC4538AN
IC15 SN74HC574NS
IC10 μPD7506CT-211
IC19 SN74HC541NS
IC5 DS1210
LT1081CN
MC34051P
REMOTE-1 (RS-232C)
FUNCTION CONTROL PANEL
VA CONTROL
REMOTE-2A IN
REMOTE-2A OUT
REMOTE-2B IN/OUT
CN630
CN631
CN632
CN633
CN634
CN635
CN636
CN637
CN638
M03 FAN MOTOR
HOURS METER RESET
BATTERY BACKUP
TTL IN
TTL OUT
RS-232C OUT
RS-232C IN
DR IN
DR EN IN
REC IN -
REC IN +
REC
HM INT
SY144,321-4A
1
2
3
4
5
A
B
C
D
E
F
G
H
I
J
K
L
M
N
O

Remote-1,2A,2B
VA Control

IF-241 BOARD

BOARD NO.1-634-512-12
HDV-10(J) ;#10001-
HDV-10(UC) ;#10001-
HDV-10(EK) ;#10001-

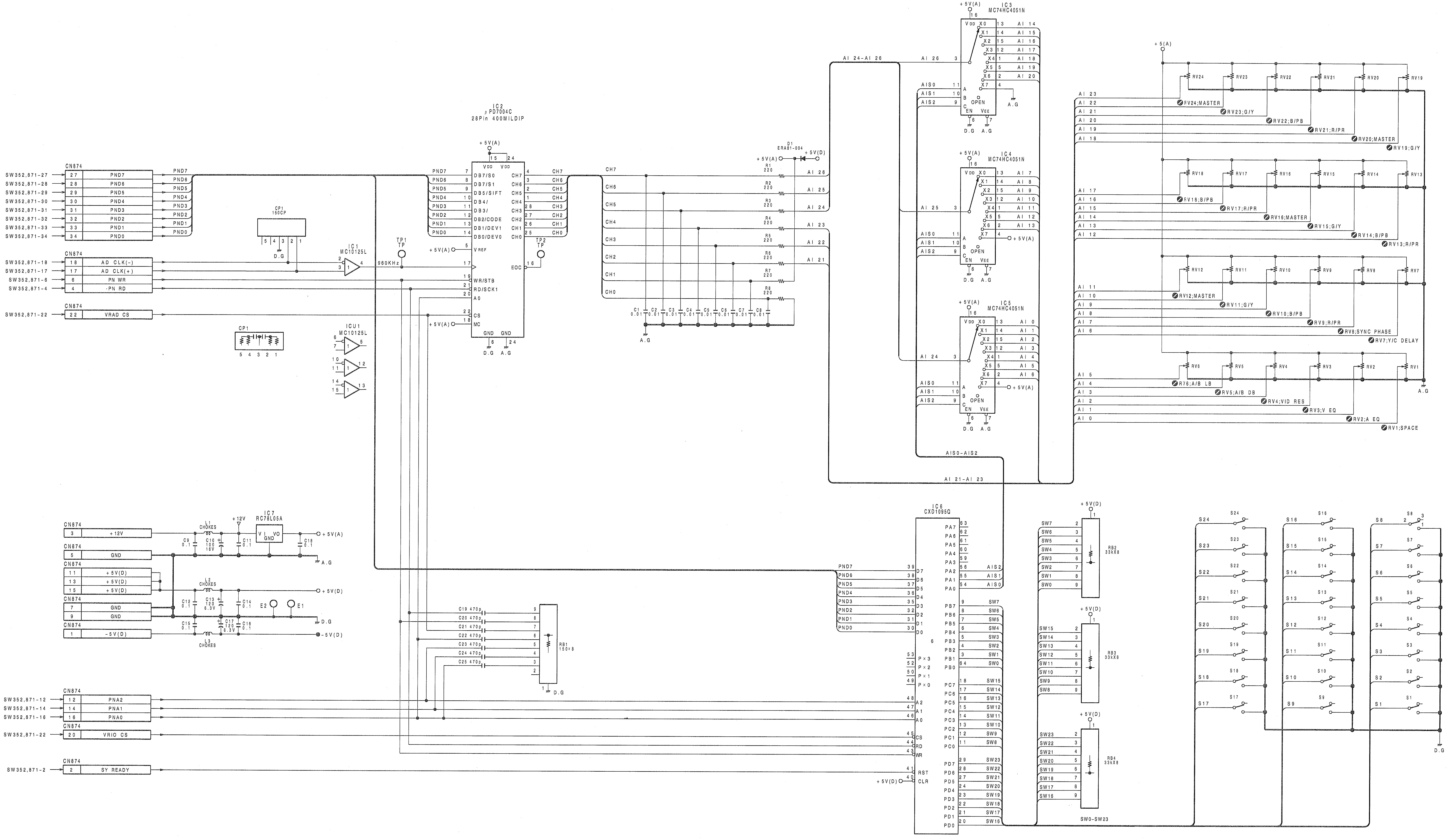
IC2
μPD7004C
28Pin 400MILDIP
IC1
MC10125L
ICU1
MC10125L
IC3
MC74HC4051N
IC4
MC74HC4051N
IC5
MC74HC4051N
IC6
CXD1095Q
IC7
RC78L05A
CN874
CP1
150CP
D1
ERA81-004
TP1
TP2
980KHz
RB1
150×8
RB2
33K×8
RB3
33K×8
RB4
33K×8
L1
CHOKES
L2
CHOKES
L3
CHOKES
+5V(A)
+5V(D)
+12V
-5V(D)
A.G
D.G
AI 24-AI 26
AIS0-AIS2
AI 21-AI 23
SW0-SW23
RV24;MASTER
RV23;G/Y
RV22;B/PB
RV21;R/PR
RV20;MASTER
RV19;G/Y
RV18;B/PB
RV17;R/PR
RV16;MASTER
RV15;G/Y
RV14;B/PB
RV13;R/PR
RV12;MASTER
RV11;G/Y
RV10;B/PB
RV9;R/PR
RV8;SYNC PHASE
RV7;Y/C DELAY
RV6;A/B LB
RV5;A/B DB
RV4;VID RES
RV3;V EQ
RV2;A EQ
RV1;SPACE
SW352,871-27
SW352,871-28
SW352,871-29
SW352,871-30
SW352,871-31
SW352,871-32
SW352,871-33
SW352,871-34
SW352,871-18
SW352,871-17
SW352,871-6
SW352,871-4
SW352,871-22
SW352,871-12
SW352,871-14
SW352,871-16
SW352,871-22
SW352,871-2
PND7
PND6
PND5
PND4
PND3
PND2
PND1
PND0
AD CLK(-)
AD CLK(+)
PN WR
PN RD
VRAD CS
PNA2
PNA1
PNA0
VRIO CS
SY READY
GND
E1
E2

A.G...Analog GND
D.G...Digital GND

Video Level Control

VR-91 BOARD

BOARD NO.1-634-509-11
HDV-10(J) ;#10001-
HDV-10(UC) ;#10001-
HDV-10(EK) ;#10001-

1
2
3
4
5

A B C D E F G H I J K L

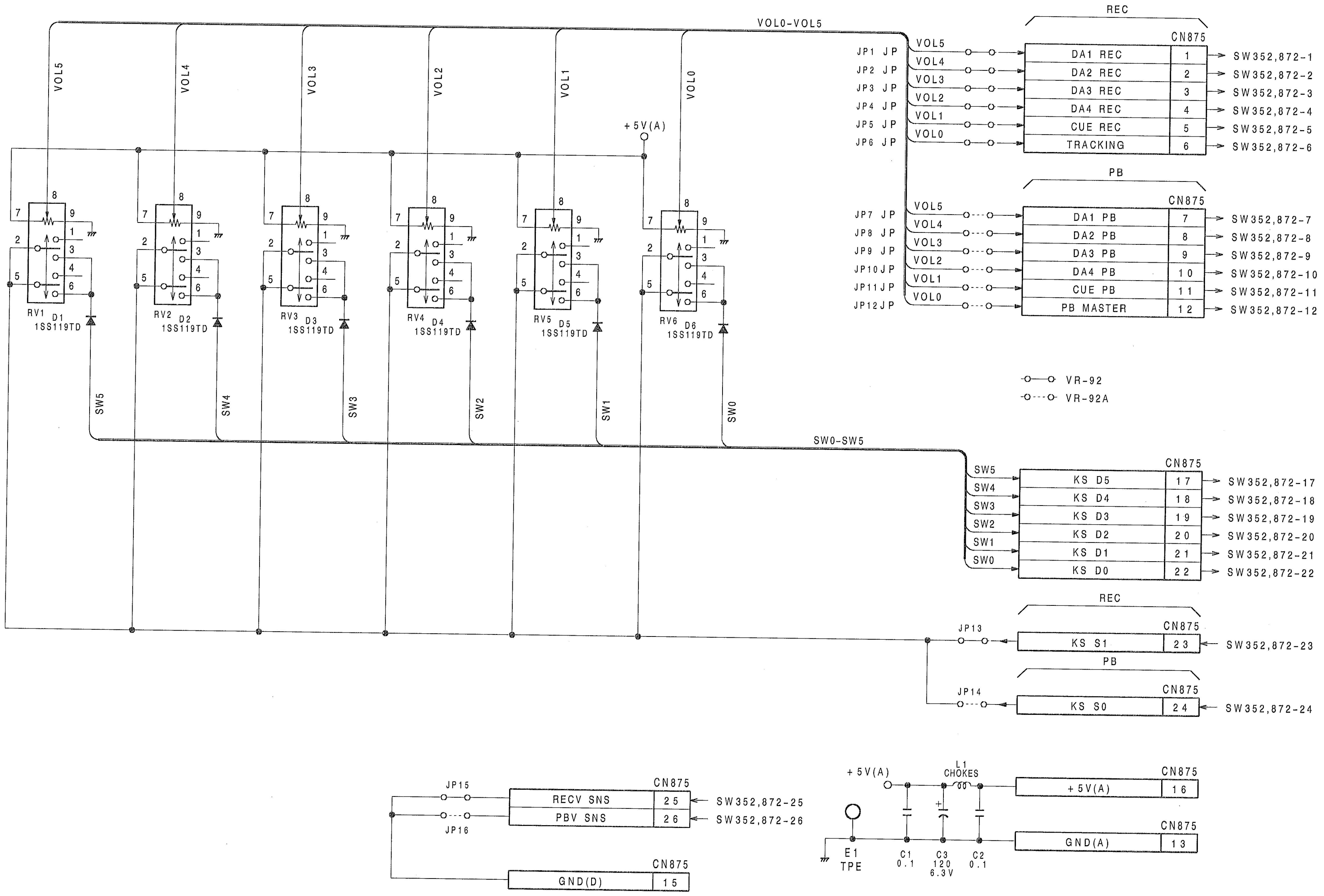
VOL0-VOL5
VOL5
VOL4
VOL3
VOL2
VOL1
VOL0
+5V(A)
RV1
RV2
RV3
RV4
RV5
RV6
D1
D2
D3
D4
D5
D6
1SS119TD
SW5
SW4
SW3
SW2
SW1
SW0
SW0-SW5
REC
PB
CN875
JP1 JP
JP2 JP
JP3 JP
JP4 JP
JP5 JP
JP6 JP
JP7 JP
JP8 JP
JP9 JP
JP10 JP
JP11 JP
JP12 JP
DA1 REC
DA2 REC
DA3 REC
DA4 REC
CUE REC
TRACKING
DA1 PB
DA2 PB
DA3 PB
DA4 PB
CUE PB
PB MASTER
SW352,872-1
SW352,872-2
SW352,872-3
SW352,872-4
SW352,872-5
SW352,872-6
SW352,872-7
SW352,872-8
SW352,872-9
SW352,872-10
SW352,872-11
SW352,872-12
VR-92
VR-92A
KS D5
KS D4
KS D3
KS D2
KS D1
KS D0
SW352,872-17
SW352,872-18
SW352,872-19
SW352,872-20
SW352,872-21
SW352,872-22
JP13
KS S1
SW352,872-23
JP14
KS S0
SW352,872-24
JP15
JP16
RECV SNS
PBV SNS
SW352,872-25
SW352,872-26
GND(D)
L1
CHOKES
E1
TPE
C1 0.1
C3 120 6.3V
C2 0.1
+5V(A)
GND(A)

Audio REC Volume
Audio PB Volume
VR-92/92A BOARD

BOARD NO.1-634-510-11
HDV-10(J) ;#10001-
HDV-10(UC) ;#10001-
HDV-10(EK) ;#10001-

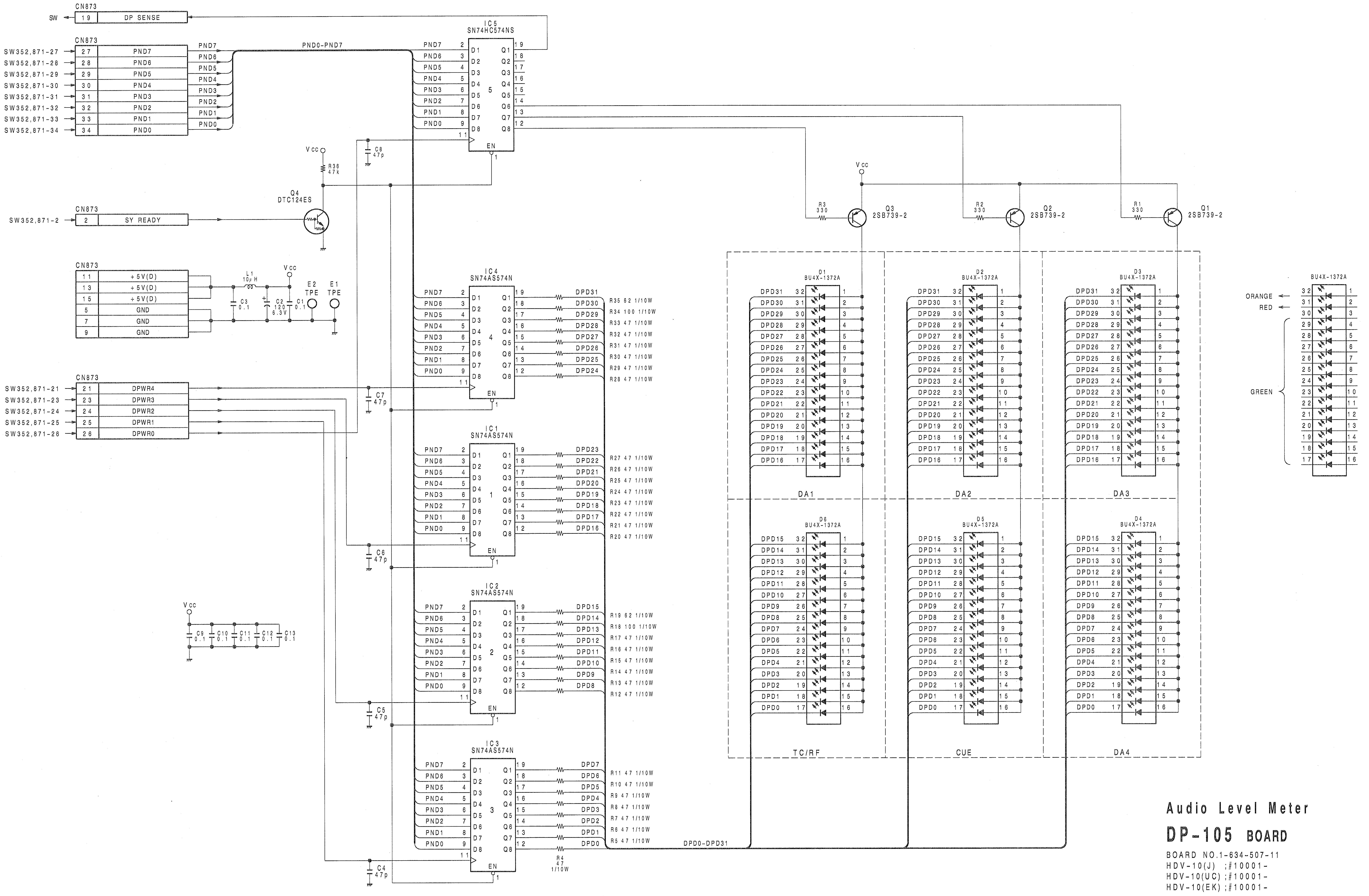
CN873
SW
19
DP SENSE
SW352,871-27
SW352,871-28
SW352,871-29
SW352,871-30
SW352,871-31
SW352,871-32
SW352,871-33
SW352,871-34
PND7
PND6
PND5
PND4
PND3
PND2
PND1
PND0
PND0-PND7
IC5
SN74HC574NS
D1
Q1
EN
C8
47p
Vcc
R36
47k
Q4
DTC124ES
SW352,871-2
SY READY
+5V(D)
GND
L1
10μH
C3
0.1
C2
120
6.3V
C1
0.1
E2
TPE
E1
TPE
SW352,871-21
SW352,871-23
SW352,871-24
SW352,871-25
SW352,871-26
DPWR4
DPWR3
DPWR2
DPWR1
DPWR0
C7
47p
C6
47p
C5
47p
C4
47p
IC4
SN74AS574N
IC1
SN74AS574N
IC2
SN74AS574N
IC3
SN74AS574N
DPD31
DPD0-DPD31
R35 62 1/10W
R34 100 1/10W
R33 47 1/10W
R32 47 1/10W
R31 47 1/10W
R30 47 1/10W
R29 47 1/10W
R28 47 1/10W
R27 47 1/10W
R26 47 1/10W
R25 47 1/10W
R24 47 1/10W
R23 47 1/10W
R22 47 1/10W
R21 47 1/10W
R20 47 1/10W
R19 62 1/10W
R18 100 1/10W
R17 47 1/10W
R16 47 1/10W
R15 47 1/10W
R14 47 1/10W
R13 47 1/10W
R12 47 1/10W
R11 47 1/10W
R10 47 1/10W
R9 47 1/10W
R8 47 1/10W
R7 47 1/10W
R6 47 1/10W
R5 47 1/10W
R4
47
1/10W
C9
0.1
C10
0.1
C11
0.1
C12
0.1
C13
0.1
R3
330
Q3
2SB739-2
R2
330
Q2
2SB739-2
R1
330
Q1
2SB739-2
D1
BU4X-1372A
D2
BU4X-1372A
D3
BU4X-1372A
D6
BU4X-1372A
D5
BU4X-1372A
D4
BU4X-1372A
DA1
DA2
DA3
TC/RF
CUE
DA4
BU4X-1372A
ORANGE
RED
GREEN
1
2
3
4
5
A
B
C
D
E
F
G
H

Audio Level Meter

DP-105 BOARD

BOARD NO.1-634-507-11
HDV-10(J) ;#10001-
HDV-10(UC) ;#10001-
HDV-10(EK) ;#10001-

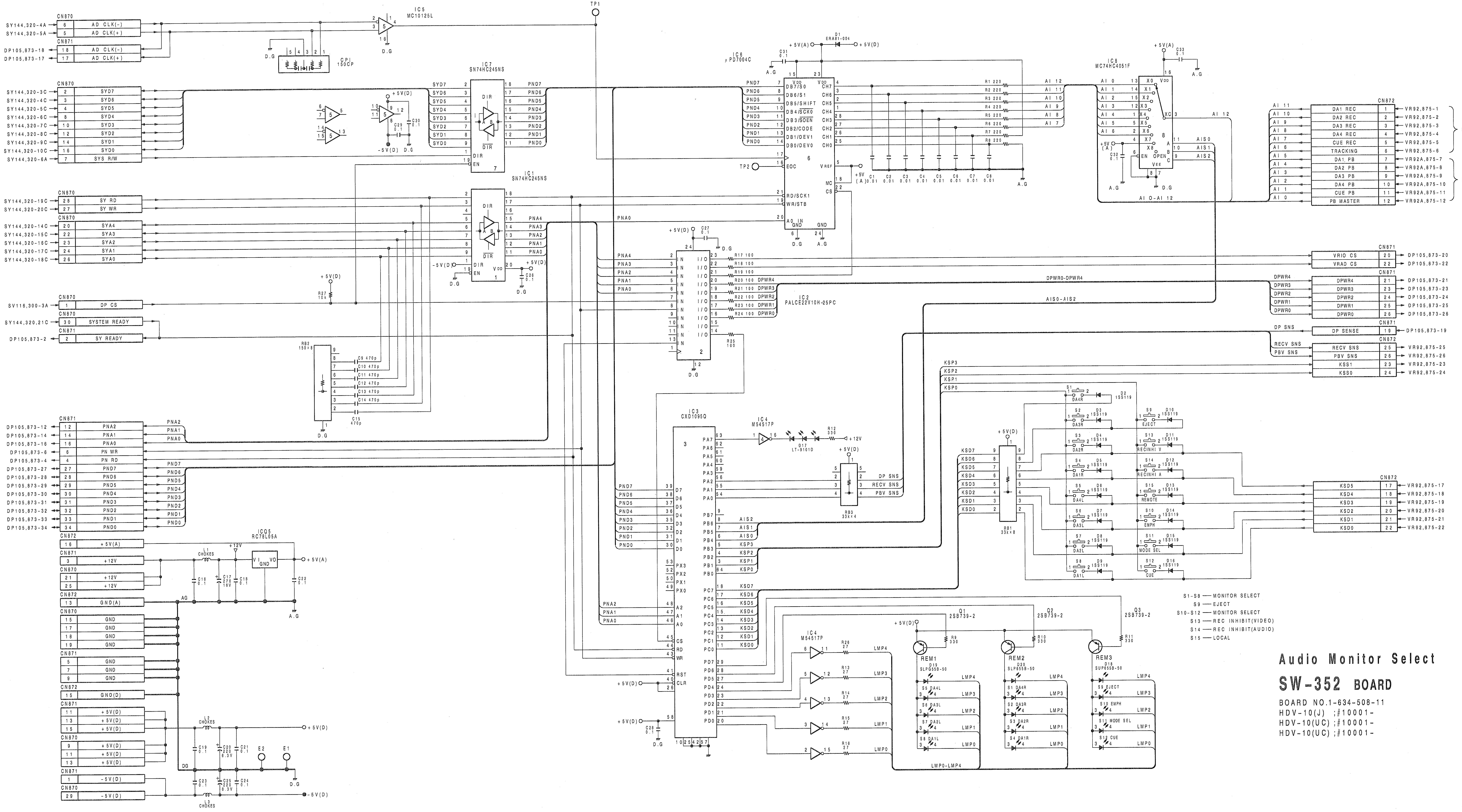
IC5 MC10125L
TP1
CP1 150CP
IC7 SN74HC245NS
IC1 SN74HC245NS
IC6 μPD7004C
D1 ERA81-004
IC8 MC74HC4051F
IC2 PALCE22V10H-25PC
IC3 CXD1095Q
IC4 M54517P
RB1 33k×8
RB2 150×8
RB3 33k×4
IC05 RC78L05A
Q1 2SB739-2
Q2 2SB739-2
Q3 2SB739-2
REM1
REM2
REM3
CN870
CN871
CN872
REC
PB
S1–S8 —— MONITOR SELECT
S9 —— EJECT
S10–S12 —— MONITOR SELECT
S13 —— REC INHIBIT(VIDEO)
S14 —— REC INHIBIT(AUDIO)
S15 —— LOCAL
1
2
3
4
5

Audio Monitor Select

SW-352 BOARD

BOARD NO.1-634-508-11
HDV-10(J) ;#10001-
HDV-10(UC) ;#10001-
HDV-10(UC) ;#10001-

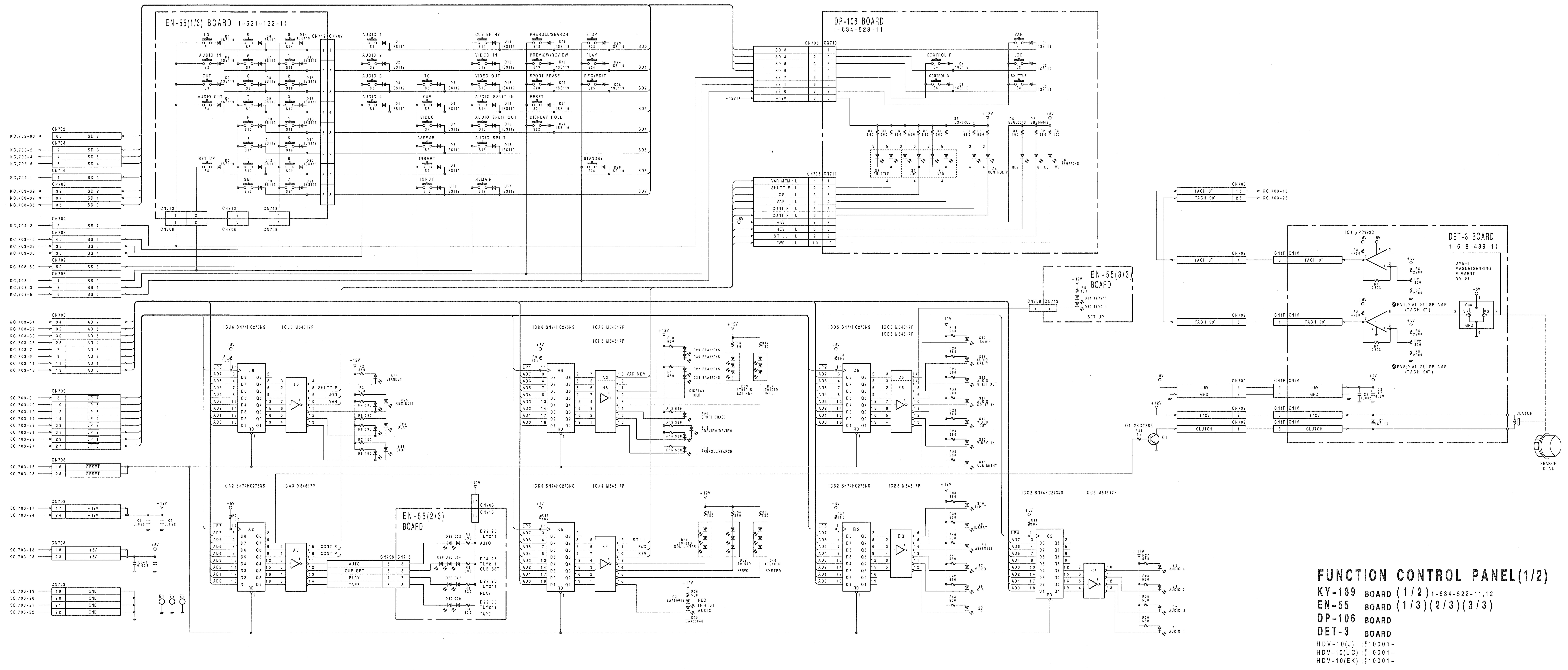
EN-55(1/3) BOARD 1-621-122-11
DP-106 BOARD 1-634-523-11
EN-55(3/3) BOARD
DET-3 BOARD 1-618-489-11
EN-55(2/3) BOARD
SEARCH DIAL
CN702
CN703
CN704
CN705
CN706
CN707
CN708
CN709
CN710
CN711
CN712
CN713
CN1F
CN1M
SET UP
ICJ6 SN74HC273NS
ICJ5 M54517P
ICH6 SN74HC273NS
ICA3 M54517P
ICH5 M54517P
ICD5 SN74HC273NS
ICC5 M54517P
ICE6 M54517P
ICA2 SN74HC273NS
ICK6 SN74HC273NS
ICK4 M54517P
ICB2 SN74HC273NS
ICB3 M54517P
ICC2 SN74HC273NS
IC1 μPC393C
Q1 2SC2383
DME-1 MAGNETSENSING ELEMENT DM-211
RV1;DIAL PULSE AMP (TACH 0°)
RV2;DIAL PULSE AMP (TACH 90°)
CLUTCH
1
2
3
4
5
A
B
C
D
E
F
G
H
I
J
K
L

FUNCTION CONTROL PANEL(1/2)

KY-189 BOARD (1/2) 1-634-522-11,12
EN-55 BOARD (1/3)(2/3)(3/3)
DP-106 BOARD
DET-3 BOARD
HDV-10(J) ;#10001-
HDV-10(UC) ;#10001-
HDV-10(EK) ;#10001-

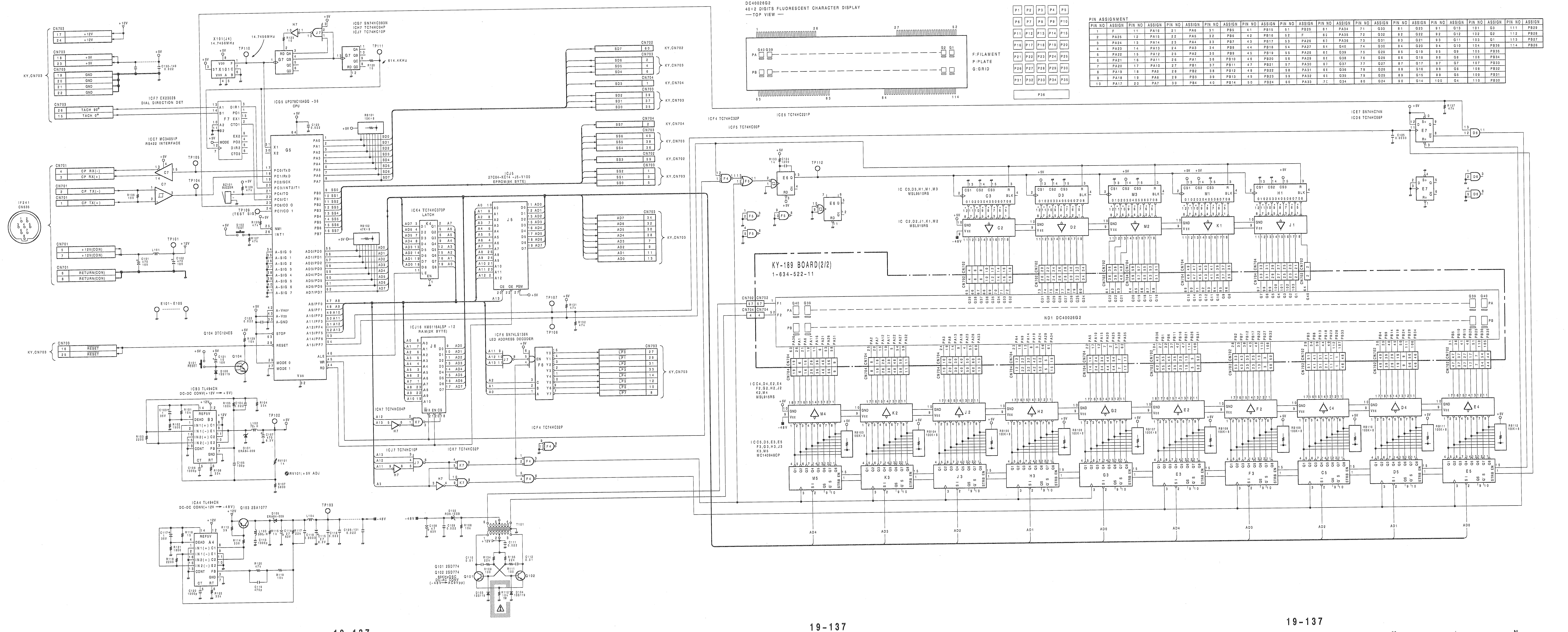
ND1
DC40026G2
40×2 DIGITS FLUORESCENT CHARACTER DISPLAY
—TOP VIEW—
F:FILAMENT
P:PLATE
G:GRID
KY-189 BOARD(2/2)
1-634-522-11
IC5 UPD78C10AGQ-35 CPU
IC J5 27C64-XC14-J5-V100 EPROM(8K BYTE)
IC K4 TC74HC373P LATCH
IC J6 HM6116ALSP-12 RAM(2K BYTE)
IC F6 SN74LS138N LED ADDRESS DECODER
IC B3 TL494CN DC-DC CONV(+12V→+5V)
IC A4 TL494CN DC-DC CONV(+12V→+48V)
IC F7 CX23028 DIAL DIRECTION DET
IC C7 MC34051P RS422 INTERFACE
CN701
CN702
CN703
CN704
KY,CN702
KY,CN703
KY,CN704
IFZ41 CN650
RV101 +5V ADJ
+48V
+12V
+5V

PIN ASSIGNMENT

PIN NO	ASSIGN	PIN NO	ASSIGN	PIN NO	ASSIGN	PIN NO	ASSIGN	PIN NO	ASSIGN	PIN NO	ASSIGN	PIN NO	ASSIGN	PIN NO	ASSIGN	PIN NO	ASSIGN	PIN NO	ASSIGN	PIN NO	ASSIGN	PIN NO	ASSIGN
1	F	11	PA16	21	PA6	31	PB5	41	PB15	51	PB25	61	PA34	71	G33	81	G23	91	G13	101	G3	111	PB29
2	PA25	12	PA15	22	PA5	32	PB6	42	PB16	52	F	62	PA35	72	G32	82	G22	92	G12	102	G2	112	PB28
3	PA24	13	PA14	23	PA4	33	PB7	43	PB17	53	PA26	63	PA36	73	G31	83	G21	93	G11	103	G1	113	PB27
4	PA23	14	PA13	24	PA3	34	PB8	44	PB18	54	PA27	64	G40	74	G30	84	G20	94	G10	104	PB36	114	PB26
5	PA22	15	PA12	25	PA2	35	PB9	45	PB19	55	PA28	65	G39	75	G29	85	G19	95	G9	105	PB35		
6	PA21	16	PA11	26	PA1	36	PB10	46	PB20	56	PA29	66	G38	76	G28	86	G18	96	G8	106	PB34		
7	PA20	17	PA10	27	PB1	37	PB11	47	PB21	57	PA30	67	G37	77	G27	87	G17	97	G7	107	PB33		
8	PA19	18	PA9	28	PB2	38	PB12	48	PB22	58	PA31	68	G36	78	G26	88	G16	98	G6	108	PB32		
9	PA18	19	PA8	29	PB3	39	PB13	49	PB23	59	PA32	69	G35	79	G25	89	G15	99	G5	109	PB31		
10	PA17	20	PA7	30	PB4	40	PB14	50	PB24	60	PA33	70	G34	80	G24	90	G14	100	G4	110	PB30		

FUNCTION CONTROL PANEL(2/2)

KC-14 BOARD 1-621-120-11
KY-189 BOARD (2/2)

HDV-10(J) ;#10001-
HDV-10(UC) ;#10001-
HDV-10(EK) ;#10001-

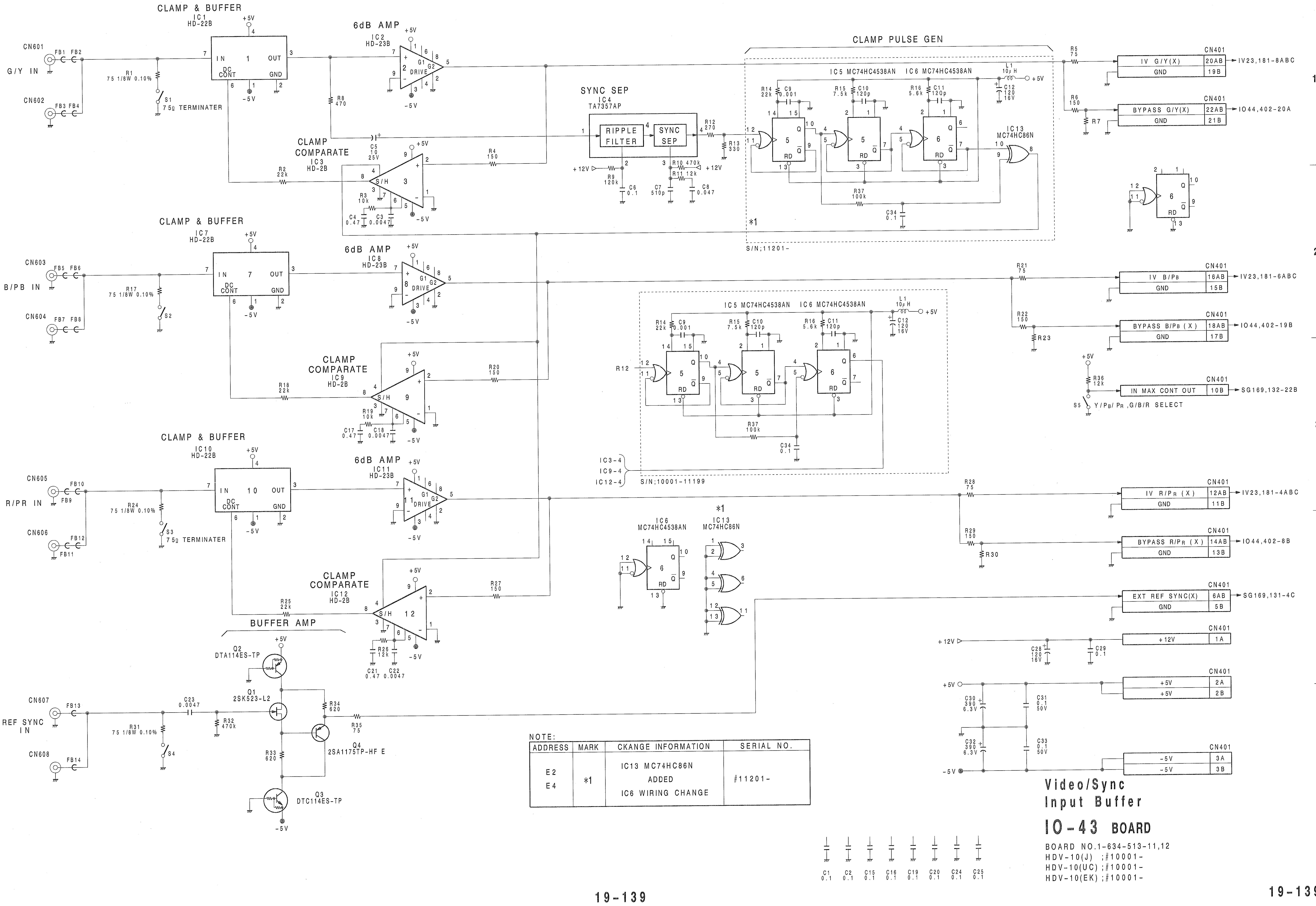
CLAMP & BUFFER
IC1 HD-22B
IN 1 OUT
DC CONT GND
6dB AMP
IC2 HD-23B
G1 G2 DRIVE
CN601
G/Y IN
CN602
FB1 FB2 FB3 FB4
R1 75 1/8W 0.10%
S1 75Ω TERMINATER
R8 470
SYNC SEP
IC4 TA7357AP
RIPPLE FILTER
SYNC SEP
R12 270
R13 330
R9 120k
C6 0.1
C7 510p
R10 470k
R11 12k
C8 0.047
+12V
C5 10 25V
CLAMP COMPARATE
IC3 HD-2B
S/H 3
R2 22k
R3 10k
C4 0.47
C3 0.0047
R4 150
CLAMP PULSE GEN
IC5 MC74HC4538AN IC6 MC74HC4538AN
R14 22k C9 0.001
R15 7.5k C10 120p
R16 5.6k C11 120p
L1 10μH
C12 120 16V
IC13 MC74HC86N
R37 100k
C34 0.1
*1
S/N;11201-
R5 75
R6 150
R7
CN401
IV G/Y(X) 20AB 19B GND
IV23,181-8ABC
BYPASS G/Y(X) 22AB 21B GND
IO44,402-20A
CLAMP & BUFFER
IC7 HD-22B
IN 7 OUT
CN603
B/PB IN
CN604
FB5 FB6 FB7 FB8
R17 75 1/8W 0.10%
S2
6dB AMP
IC8 HD-23B
CLAMP COMPARATE
IC9 HD-2B
S/H 9
R18 22k
R19 10k
C17 0.47
C18 0.0047
R20 150
R21 75
R22 150
R23
IV B/PB 16AB 15B GND
IV23,181-6ABC
BYPASS B/PB (X) 18AB 17B GND
IO44,402-19B
+5V
R36 12k
IN MAX CONT OUT 10B
SG169,132-22B
S5 Y/PB/PR ,G/B/R SELECT
IC3-4
IC9-4
IC12-4
S/N;10001-11199
CLAMP & BUFFER
IC10 HD-22B
IN 10 OUT
CN605
R/PR IN
CN606
FB9 FB10 FB11 FB12
R24 75 1/8W 0.10%
S3 75Ω TERMINATER
6dB AMP
IC11 HD-23B
CLAMP COMPARATE
IC12 HD-2B
S/H 12
R25 22k
R26 12k
C21 0.47
C22 0.0047
R27 150
R28 75
R29 150
R30
IV R/PR (X) 12AB 11B GND
IV23,181-4ABC
BYPASS R/PR (X) 14AB 13B GND
IO44,402-8B
EXT REF SYNC(X) 6AB 5B GND
SG169,131-4C
IC6 MC74HC4538AN
IC13 MC74HC86N
BUFFER AMP
Q2 DTA114ES-TP
Q1 2SK523-L2
R34 620
R35 75
Q4 2SA1175TP-HF E
R33 620
Q3 DTC114ES-TP
CN607
REF SYNC IN
CN608
FB13 FB14
C23 0.0047
R32 470k
R31 75 1/8W 0.10%
S4
+12V 1A
C28 120 16V
C29 0.1
+5V 2A 2B
C30 390 6.3V
C31 0.1 50V
C32 390 6.3V
C33 0.1 50V
-5V 3A 3B
C1 0.1 C2 0.1 C15 0.1 C16 0.1 C19 0.1 C20 0.1 C24 0.1 C25 0.1
A B C D E F G H
1 2 3 4 5

NOTE:

ADDRESS	MARK	CKANGE INFORMATION	SERIAL NO.
E2 E4	*1	IC13 MC74HC86N ADDED IC6 WIRING CHANGE	♯11201-

Video/Sync Input Buffer

IO-43 BOARD

BOARD NO.1-634-513-11,12
HDV-10(J) ;♯10001-
HDV-10(UC) ;♯10001-
HDV-10(EK) ;♯10001-

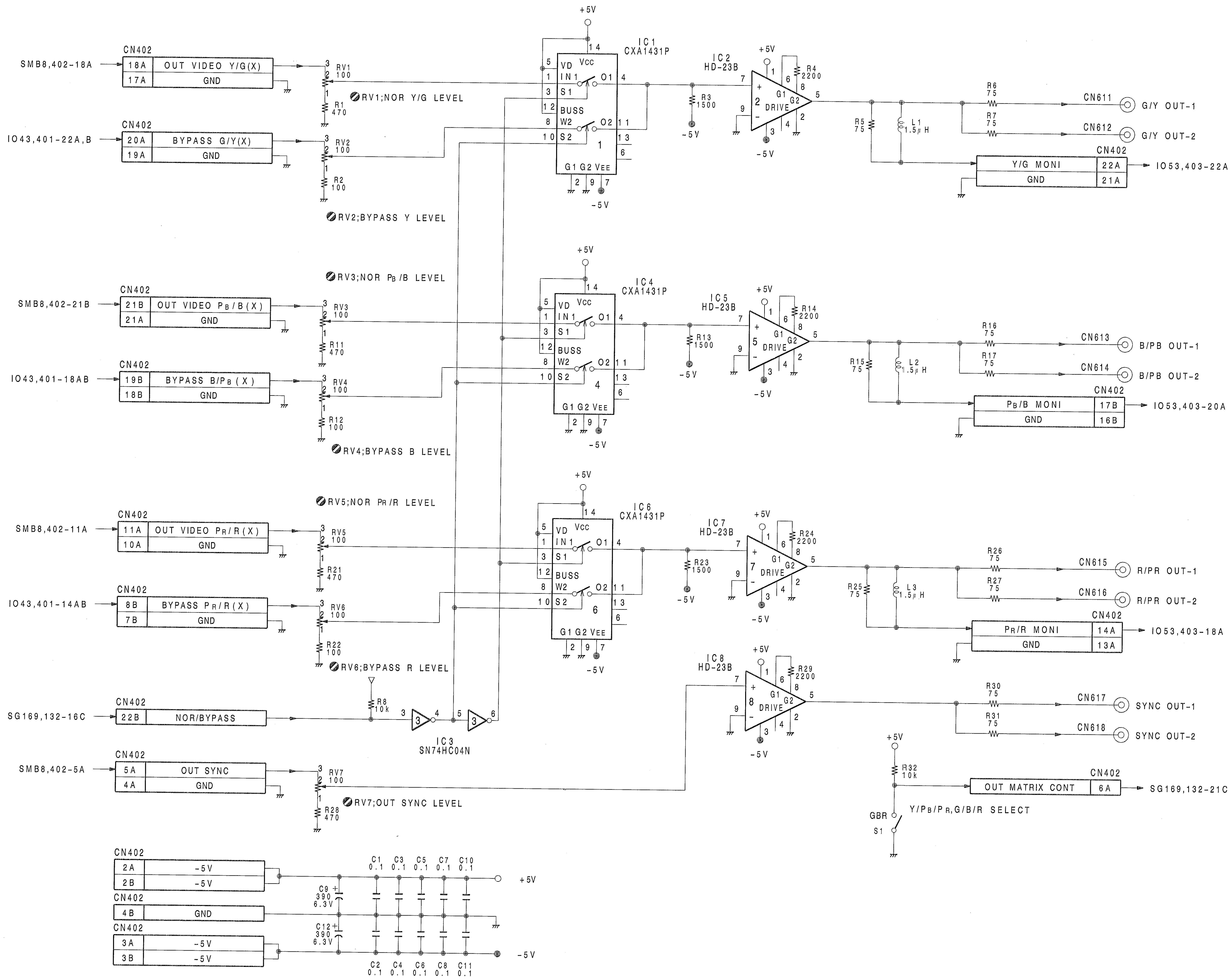
SMB8,402-18A
CN402
18A OUT VIDEO Y/G(X)
17A GND
RV1 100
R1 470
RV1;NOR Y/G LEVEL
IO43,401-22A,B
20A BYPASS G/Y(X)
19A GND
RV2 100
R2 100
RV2;BYPASS Y LEVEL
+5V
IC1 CXA1431P
VD Vcc
IN1
S1
BUSS
W2
S2
G1 G2 VEE
O1
O2
-5V
IC2 HD-23B
R3 1500
R4 2200
G1 G2 DRIVE
R5 75
L1 1.5μH
R6 75
R7 75
CN611 G/Y OUT-1
CN612 G/Y OUT-2
Y/G MONI 22A
GND 21A
IO53,403-22A
RV3;NOR PB/B LEVEL
SMB8,402-21B
21B OUT VIDEO PB/B(X)
21A GND
RV3 100
R11 470
IO43,401-18AB
19B BYPASS B/PB(X)
18B GND
RV4 100
R12 100
RV4;BYPASS B LEVEL
IC4 CXA1431P
IC5 HD-23B
R13 1500
R14 2200
R15 75
L2 1.5μH
R16 75
R17 75
CN613 B/PB OUT-1
CN614 B/PB OUT-2
PB/B MONI 17B
GND 16B
IO53,403-20A
RV5;NOR PR/R LEVEL
SMB8,402-11A
11A OUT VIDEO PR/R(X)
10A GND
RV5 100
R21 470
IO43,401-14AB
8B BYPASS PR/R(X)
7B GND
RV6 100
R22 100
RV6;BYPASS R LEVEL
IC6 CXA1431P
IC7 HD-23B
R23 1500
R24 2200
R25 75
L3 1.5μH
R26 75
R27 75
CN615 R/PR OUT-1
CN616 R/PR OUT-2
PR/R MONI 14A
GND 13A
IO53,403-18A
SG169,132-16C
22B NOR/BYPASS
R8 10k
IC3 SN74HC04N
IC8 HD-23B
R29 2200
R30 75
R31 75
CN617 SYNC OUT-1
CN618 SYNC OUT-2
SMB8,402-5A
5A OUT SYNC
4A GND
RV7 100
R28 470
RV7;OUT SYNC LEVEL
R32 10k
OUT MATRIX CONT 6A
SG169,132-21C
GBR
S1
Y/PB/PR,G/B/R SELECT
2A -5V
2B -5V
4B GND
3A -5V
3B -5V
C1 0.1 C3 0.1 C5 0.1 C7 0.1 C10 0.1
C9 390 6.3V
C12 390 6.3V
C2 0.1 C4 0.1 C6 0.1 C8 0.1 C11 0.1
+5V
-5V

Video/ Sync Output Buffer

IO-44 BOARD

BOARD NO.1-634-514-11,12
HDV-10(J) ;#10001-
HDV-10(UC) ;#10001-
HDV-10(EK) ;#10001-

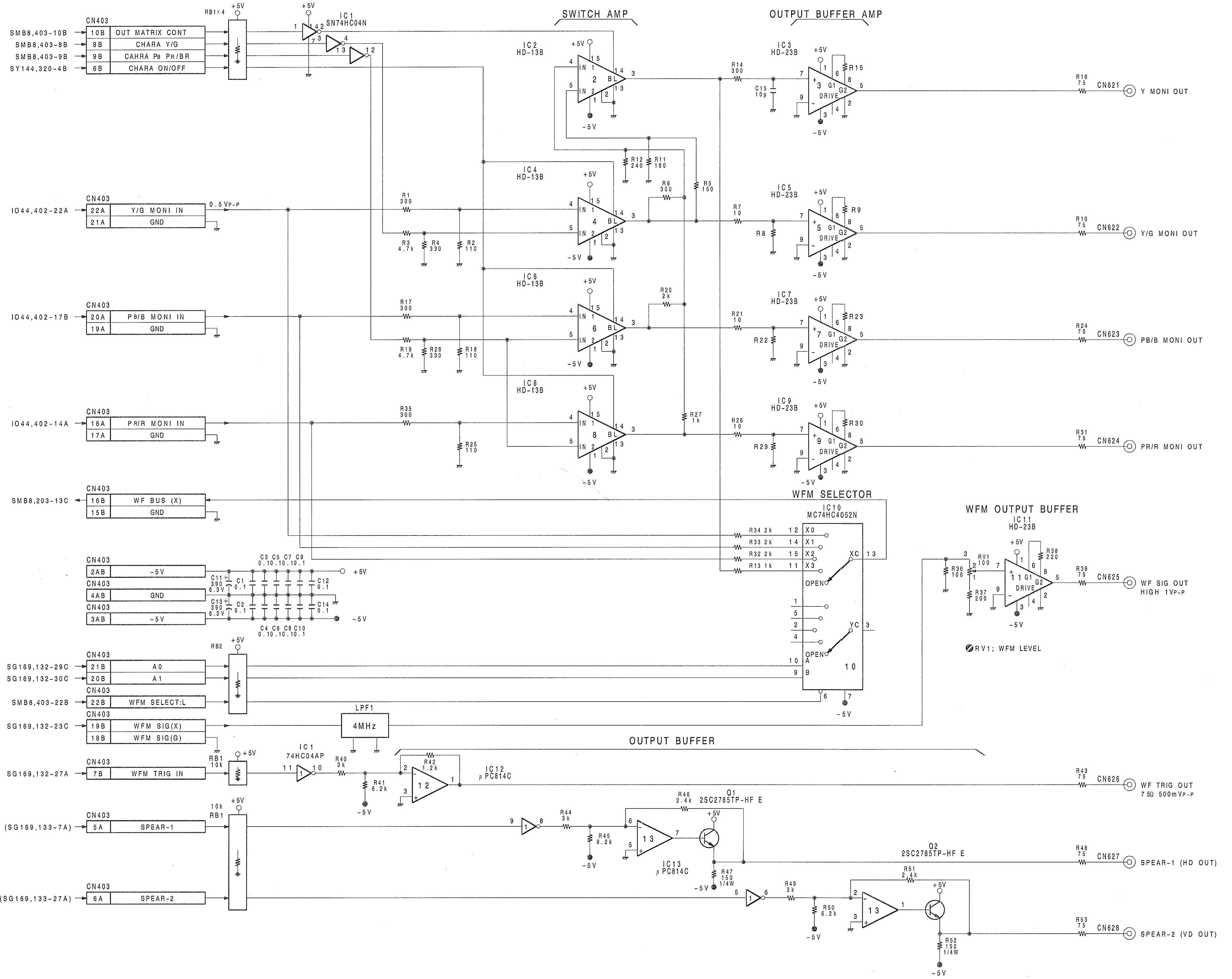
SWITCH AMP
OUTPUT BUFFER AMP
WFM SELECTOR
WFM OUTPUT BUFFER
OUTPUT BUFFER
CN403
SMB8,403-10B
SMB8,403-8B
SMB8,403-9B
SY144,320-4B
10B OUT MATRIX CONT
8B CHARA Y/G
9B CAHRA PB PR/BR
6B CHARA ON/OFF
RB1×4
IC1 SN74HC04N
IC2 HD-13B
IC4 HD-13B
IC6 HD-13B
IC8 HD-13B
IC3 HD-23B
IC5 HD-23B
IC7 HD-23B
IC9 HD-23B
IO44,402-22A
22A Y/G MONI IN
21A GND
0.5VP-P
IO44,402-17B
20A PB/B MONI IN
19A GND
IO44,402-14A
18A PR/R MONI IN
17A GND
SMB8,203-13C
16B WF BUS (X)
15B GND
2AB -5V
4AB GND
3AB -5V
+5V
-5V
SG169,132-29C
SG169,132-30C
SMB8,403-22B
SG169,132-23C
SG169,132-27A
(SG169,133-7A)
(SG169,133-27A)
21B A0
20B A1
22B WFM SELECT:L
19B WFM SIG(X)
18B WFM SIG(G)
7B WFM TRIG IN
5A SPEAR-1
6A SPEAR-2
RB2
LPF1 4MHz
IC1 74HC04AP
IC10 MC74HC4052N
IC11 HD-23B
IC12 μPC814C
IC13 μPC814C
Q1 2SC2785TP-HF E
Q2 2SC2785TP-HF E
CN621 Y MONI OUT
CN622 Y/G MONI OUT
CN623 PB/B MONI OUT
CN624 PR/R MONI OUT
CN625 WF SIG OUT HIGH 1VP-P
CN626 WF TRIG OUT 75Ω 500mVP-P
CN627 SPEAR-1 (HD OUT)
CN628 SPEAR-2 (VD OUT)
RV1; WFM LEVEL
DRIVE
OPEN
XC
YC

Character Mix
Video Monitor Out
IO-53 BOARD

BOARD NO.1-634-515-11,12
HDV-10(J);#10001-
HDV-10(UC)#10001-
HDV-10(EK)#10001-

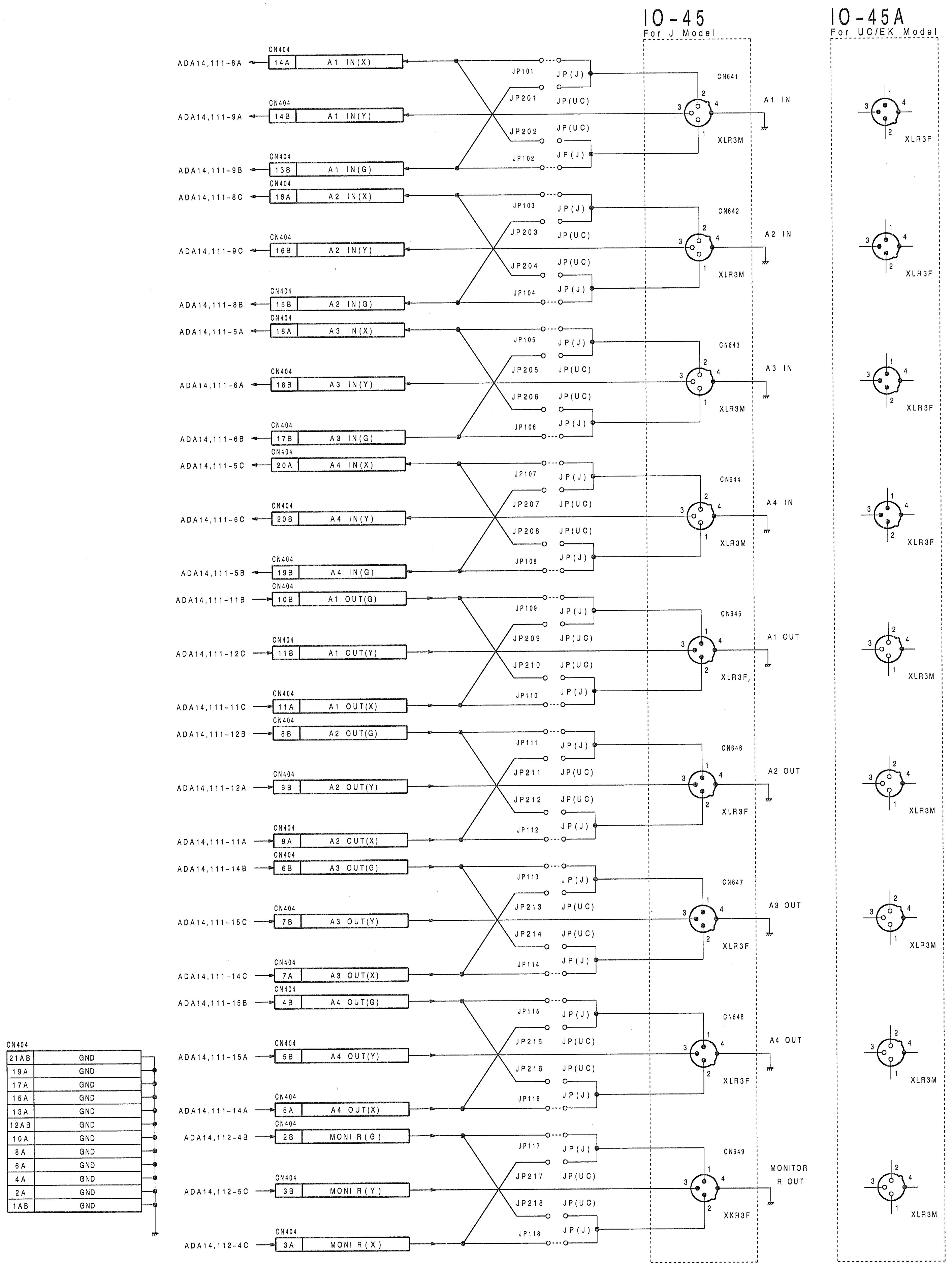
IO-45
For J Model
IO-45A
For UC/EK Model
ADA14,111-8A
CN404 14A A1 IN(X)
ADA14,111-9A
CN404 14B A1 IN(Y)
ADA14,111-9B
CN404 13B A1 IN(G)
ADA14,111-8C
CN404 16A A2 IN(X)
ADA14,111-9C
CN404 16B A2 IN(Y)
ADA14,111-8B
CN404 15B A2 IN(G)
ADA14,111-5A
CN404 18A A3 IN(X)
ADA14,111-6A
CN404 18B A3 IN(Y)
ADA14,111-6B
CN404 17B A3 IN(G)
ADA14,111-5C
CN404 20A A4 IN(X)
ADA14,111-6C
CN404 20B A4 IN(Y)
ADA14,111-5B
CN404 19B A4 IN(G)
ADA14,111-11B
CN404 10B A1 OUT(G)
ADA14,111-12C
CN404 11B A1 OUT(Y)
ADA14,111-11C
CN404 11A A1 OUT(X)
ADA14,111-12B
CN404 8B A2 OUT(G)
ADA14,111-12A
CN404 9B A2 OUT(Y)
ADA14,111-11A
CN404 9A A2 OUT(X)
ADA14,111-14B
CN404 6B A3 OUT(G)
ADA14,111-15C
CN404 7B A3 OUT(Y)
ADA14,111-14C
CN404 7A A3 OUT(X)
ADA14,111-15B
CN404 4B A4 OUT(G)
ADA14,111-15A
CN404 5B A4 OUT(Y)
ADA14,111-14A
CN404 5A A4 OUT(X)
ADA14,112-4B
CN404 2B MONI R(G)
ADA14,112-5C
CN404 3B MONI R(Y)
ADA14,112-4C
CN404 3A MONI R(X)
JP101 JP(J)
JP201 JP(UC)
JP202 JP(UC)
JP102 JP(J)
JP103 JP(J)
JP203 JP(UC)
JP204 JP(UC)
JP104 JP(J)
JP105 JP(J)
JP205 JP(UC)
JP206 JP(UC)
JP106 JP(J)
JP107 JP(J)
JP207 JP(UC)
JP208 JP(UC)
JP108 JP(J)
JP109 JP(J)
JP209 JP(UC)
JP210 JP(UC)
JP110 JP(J)
JP111 JP(J)
JP211 JP(UC)
JP212 JP(UC)
JP112 JP(J)
JP113 JP(J)
JP213 JP(UC)
JP214 JP(UC)
JP114 JP(J)
JP115 JP(J)
JP215 JP(UC)
JP216 JP(UC)
JP116 JP(J)
JP117 JP(J)
JP217 JP(UC)
JP218 JP(UC)
JP118 JP(J)
CN641 XLR3M A1 IN
CN642 XLR3M A2 IN
CN643 XLR3M A3 IN
CN644 XLR3M A4 IN
CN645 XLR3F A1 OUT
CN646 XLR3F A2 OUT
CN647 XLR3F A3 OUT
CN648 XLR3F A4 OUT
CN649 XKR3F MONITOR R OUT
XLR3F
XLR3F
XLR3F
XLR3F
XLR3M
XLR3M
XLR3M
XLR3M
XLR3M
1
2
3
4
CN404
21AB GND
19A GND
17A GND
15A GND
13A GND
12AB GND
10A GND
8A GND
6A GND
4A GND
2A GND
1AB GND

CN404		
	B	A
22		
21	GND	GND
20	A4 IN(Y)	A4 IN(X)
19	A4 IN(G)	GND
18	A3 IN(Y)	A3 IN(X)
17	A3 IN(G)	GND
16	A2 IN(Y)	A2 IN(X)
15	A2 IN(G)	GND
14	A1 IN(Y)	A1 IN(X)
13	A1 IN(G)	GND
12	GND	GND
11	A1 OUT(Y)	A1 OUT(X)
10	A1 OUT(G)	GND
9	A2 OUT(Y)	A2 OUT(X)
8	A2 OUT(G)	GND
7	A3 OUT(Y)	A3 OUT(X)
6	A3 OUT(G)	GND
5	A4 OUT(Y)	A4 OUT(X)
4	A4 OUT(G)	GND
3	MONI R(Y)	MONI R(X)
2	MONI R(G)	GND
1	GND	GND

Analog Audio Interface

IO-45/45A BOARD

BOARD NO.1-634-516-11
HDV-10(J) ;#10001-
HDV-10(UC) ;#10001-
HDV-10(EK) ;#10001-

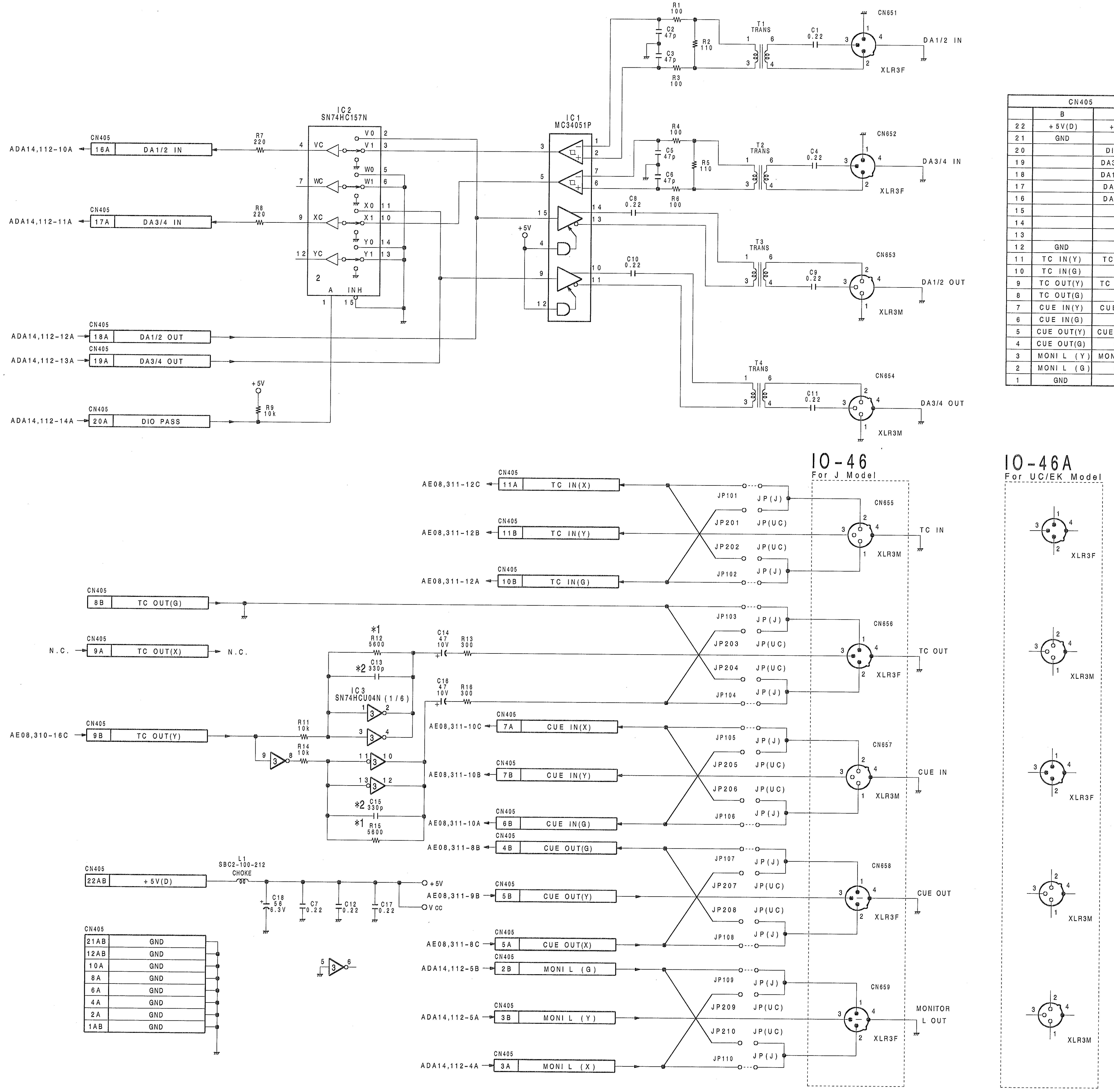
IC2
SN74HC157N
IC1
MC34051P
IC3
SN74HCU04N (1/6)
ADA14,112-10A
ADA14,112-11A
ADA14,112-12A
ADA14,112-13A
ADA14,112-14A
CN405
16A DA1/2 IN
17A DA3/4 IN
18A DA1/2 OUT
19A DA3/4 OUT
20A DIO PASS
R7 220
R8 220
R9 10k
+5V
VC
WC
XC
YC
V0
V1
W0
W1
X0
X1
Y0
Y1
A
INH
R1 100
R2 110
R3 100
C2 47p
C3 47p
T1 TRANS
C1 0.22
CN651
DA1/2 IN
XLR3F
R4 100
R5 110
R6 100
C5 47p
C6 47p
T2 TRANS
C4 0.22
CN652
DA3/4 IN
C8 0.22
C10 0.22
T3 TRANS
C9 0.22
CN653
DA1/2 OUT
XLR3M
T4 TRANS
C11 0.22
CN654
DA3/4 OUT
IO-46
For J Model
IO-46A
For UC/EK Model
AE08,311-12C
AE08,311-12B
AE08,311-12A
11A TC IN(X)
11B TC IN(Y)
10B TC IN(G)
JP101 JP(J)
JP201 JP(UC)
JP202 JP(UC)
JP102 JP(J)
CN655
TC IN
8B TC OUT(G)
N.C.
9A TC OUT(X)
JP103 JP(J)
JP203 JP(UC)
JP204 JP(UC)
JP104 JP(J)
CN656
TC OUT
*1 R12 5600
*2 C13 330p
C14 47 10V
R13 300
C16 47 10V
R16 300
AE08,310-16C
9B TC OUT(Y)
R11 10k
R14 10k
*2 C15 330p
*1 R15 5600
AE08,311-10C
AE08,311-10B
AE08,311-10A
7A CUE IN(X)
7B CUE IN(Y)
6B CUE IN(G)
JP105 JP(J)
JP205 JP(UC)
JP206 JP(UC)
JP106 JP(J)
CN657
CUE IN
AE08,311-8B
AE08,311-9B
AE08,311-8C
4B CUE OUT(G)
5B CUE OUT(Y)
5A CUE OUT(X)
JP107 JP(J)
JP207 JP(UC)
JP208 JP(UC)
JP108 JP(J)
CN658
CUE OUT
22AB +5V(D)
L1 SBC2-100-212 CHOKE
C18 56 6.3V
C7 0.22
C12 0.22
C17 0.22
+5V
Vcc
21AB GND
12AB GND
10A GND
8A GND
6A GND
4A GND
2A GND
1AB GND
ADA14,112-5B
ADA14,112-5A
ADA14,112-4A
2B MONI L (G)
3B MONI L (Y)
3A MONI L (X)
JP109 JP(J)
JP209 JP(UC)
JP210 JP(UC)
JP110 JP(J)
CN659
MONITOR L OUT
XLR3F
XLR3M
1
2
3
4
5
A
B
C
D
E
F
G
H

CN405		
	B	A
22	+5V(D)	+5V(D)
21	GND	GND
20		DIO PAS
19		DA3/4 OUT
18		DA1/2 OUT
17		DA3/4 IN
16		DA1/2 IN
15		
14		
13		
12	GND	GND
11	TC IN(Y)	TC IN(X)
10	TC IN(G)	GND
9	TC OUT(Y)	TC OUT(X)
8	TC OUT(G)	GND
7	CUE IN(Y)	CUE IN(X)
6	CUE IN(G)	GND
5	CUE OUT(Y)	CUE OUT(X)
4	CUE OUT(G)	GND
3	MONI L (Y)	MONI L (X)
2	MONI L (G)	GND
1	GND	GND

NOTE;

ADDRESS	MARK	CHANGE INFORMATION	SERIAL NO.
C4	＊1	R12,15 CHANGED 5100 → 5600	#10101-
C4	＊2	C13,15 CHANGED 1000P → 300P	#10601-

NOTE;

CN405 is equal to CN403 on the silk screen of printed circuit board.

Digital Audio Interface

IO-46/46A BOARD

BOARD NO.1-634-517-11
HDV-10(J) ;#10001-
HDV-10(UC) ;#10001-
HDV-10(EK) ;#10001-

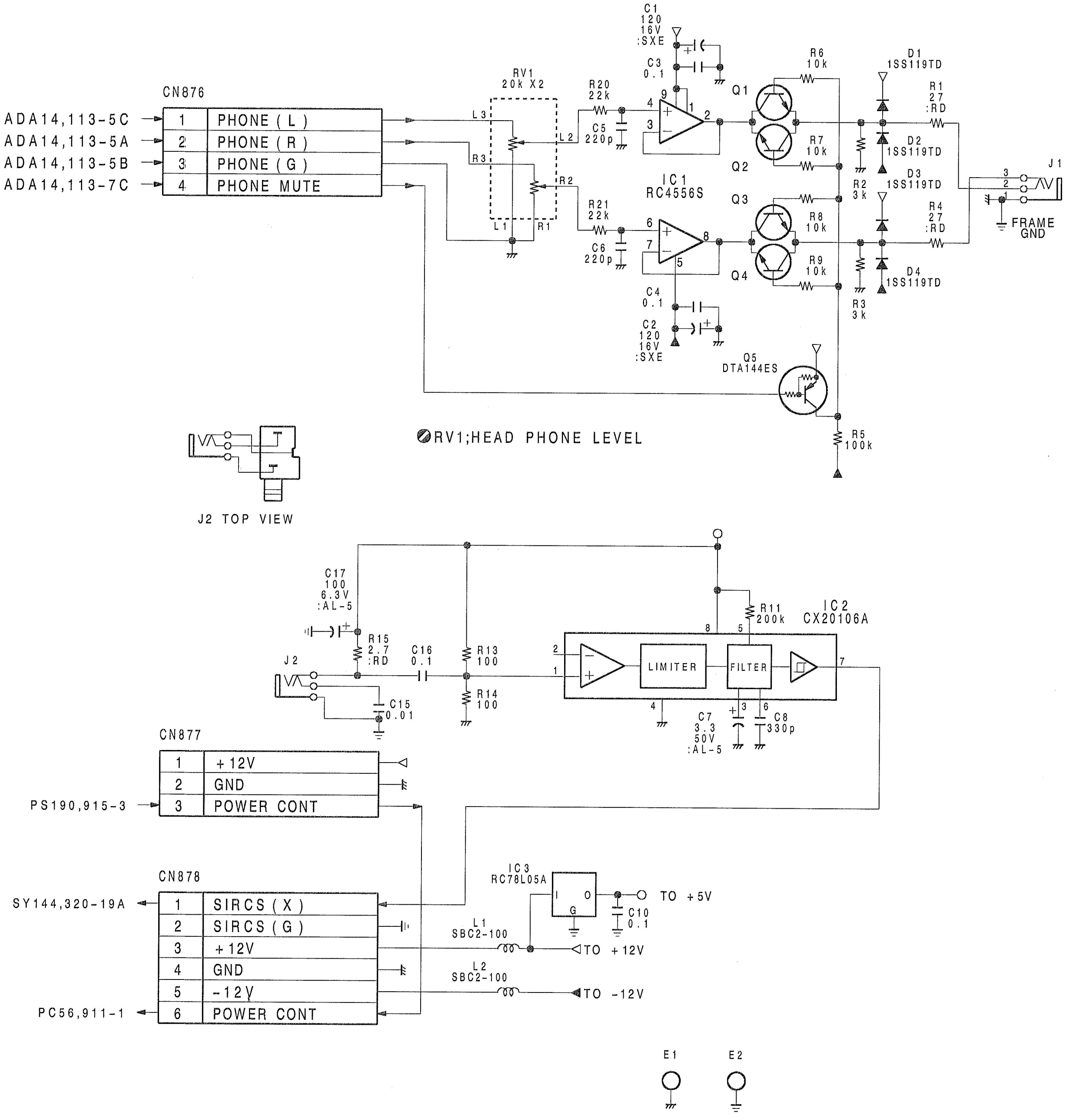
CN876
ADA14,113-5C
ADA14,113-5A
ADA14,113-5B
ADA14,113-7C
1 PHONE (L)
2 PHONE (R)
3 PHONE (G)
4 PHONE MUTE
RV1 20k X2
L3
R3
L2
R2
L1
R1
R20 22k
R21 22k
C5 220p
C6 220p
C1 120 16V :SXE
C3 0.1
C4 0.1
C2 120 16V :SXE
IC1 RC4556S
Q1
Q2
Q3
Q4
R6 10k
R7 10k
R8 10k
R9 10k
D1 1SS119TD
D2 1SS119TD
D3 1SS119TD
D4 1SS119TD
R1 27 :RD
R4 27 :RD
R2 3k
R3 3k
J1
FRAME GND
Q5 DTA144ES
R5 100k
RV1;HEAD PHONE LEVEL
J2 TOP VIEW
C17 100 6.3V :AL-5
R15 2.7 :RD
C16 0.1
R13 100
R14 100
C15 0.01
J2
R11 200k
IC2 CX20106A
LIMITER
FILTER
C7 3.3 50V :AL-5
C8 330p
CN877
1 +12V
2 GND
3 POWER CONT
PS190,915-3
CN878
SY144,320-19A
PC56,911-1
1 SIRCS (X)
2 SIRCS (G)
3 +12V
4 GND
5 -12V
6 POWER CONT
IC3 RC78L05A
I O G
C10 0.1
TO +5V
L1 SBC2-100
TO +12V
L2 SBC2-100
TO -12V
E1
E2
1
2
3
4

5

Headphone/ Remote Jack

VR-93 BOARD

BOARD NO.1-634-511-11
HDV-10(J) ;#10001-
HDV-10(UC) ;#10001-
HDV-10(EK) ;#10001-

A B C D

NOTE:

ADDRESS	MARK	CHANGE INFORMATION	SERIAL NO.
D3	*1	C5,C6,C7,C8,C9,C10 CHANGED 1500/200 → 1800/200	#10401-
B1	*2	S001 CHANGED 7.5A → 12.5A	#10701-
N2	*3	D101 IOE2 R101 330 ADDED	#11101-

AC-100
1-634-521-12
CM-12
*2 S001 SW WITH BREAKER 12.5A
CN916 AC(L) IN
AC GND
AC(N) IN
AC(L)OUT
AC(N)OUT
CN906
PS-187
1-634-518-11,12
CN901 AC(L) IN
AC(N) IN
F1 109°C
R1 12 20W
VDR1 ENB461-10A
RY1 JC1a-DC12V-TV
D2 S15VB60
SW1 150V 200V VOLTAGE SELECTOR
Q1 2SK385
IC1 TL7705ACP
IC2 AQV201
CN904 DC 250V P GND
CN903 DC 250V DC 250V P GND
PC56,907-3
PC56,907-2
PC56,907-1
CN905 POWER OFF P
PC56,908-1
RUSH RLY +12V
S GND
PC56,908-2
PC56,908-3
S GND
PC56,908-4
FAN +15V
PC56,908-5
RV1;POWER OFF SENS
FAN MOTOR (REAR SIDE)
CN902 S GND
FAN +15V
PC-57
1-634-520-11
CN912 DC 250V P GND
IC101 D-D CONV-1 IP-260C-15
(5V 30A)
RV1;-5V ADJ
IC102 D-D CONV-2 IP-161CS-10
(12V 8.3A)
RV2;-12V ADJ
IC103 D-D CONV-3 IP-161CS-10
(12V 8.3A)
RV3;+12V ADJ
T2 MA-SN26×16×4.5 WSA
T4 MA-SN18×12×4.5 XSA
T6 MA-SN18×12×4.5 XSA
IC1 AQV201
IC3 AQV201
IC5 AQV201
Q1 2SA1115-F
Q3 2SA1115-F
Q5 2SA1115-F
IC2 μPC814C
IC4 μPC814C
IC6 μPC814C
Q2 2SB1016-Y
Q4 2SD1407-Y
Q6 2SB1016-Y
*3 D101 IOE2
*3 R101 330
CN914
GND(-5V)
GND(-5V)
GND(-5V)
SENS GND(-5V)
MB,242
MB,240
MB,246
MB,219-1
-5V SENS
MB,219-3
-5V OUT
MB,243
MB,241
MB,239
CN913
-5V OUT
-5,±12 CONT IN
+12V IN
+12V OUT
-12V OUT
GND
PC56,910-6
PC56,910-1
PC56,910-2
PC56,910-3
PC56,910-4
PC56,910-5
+12V OUT
MB,232
NC
+12V SENS
MB,219-4
GND(+12V)
NC
MB,237
GND(-12V)
NC
MB,233
-12V SENS
MB,219-2
-12V
NC
MB,238
POWER DISTRIBUTION TAP

AC-100 BOARD
PC-57 BOARD
PS-187 BOARD

POWER SUPPLY (1/2)

HDV-10(J) ;#10001-
HDV-10(UC) ;#10001-
HDV-10(EK) ;#10001-

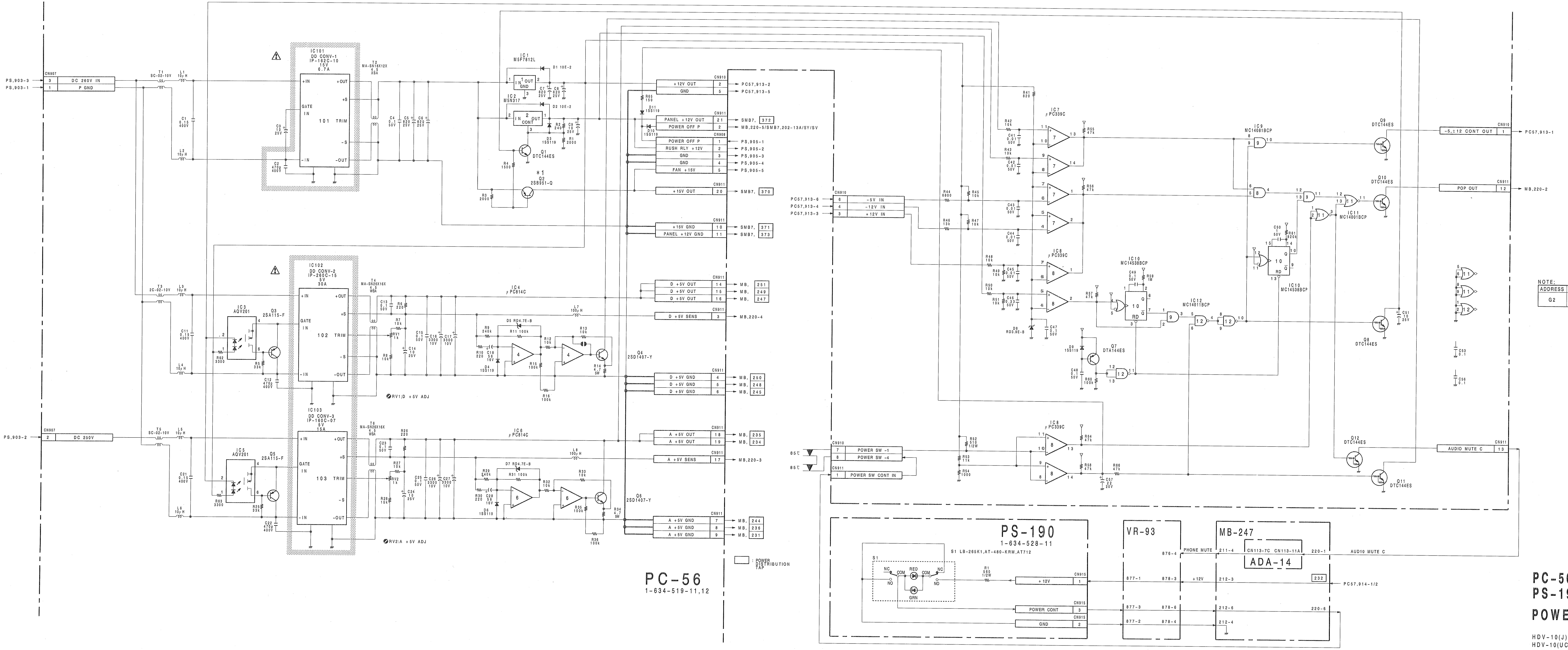
PS,903-3
PS,903-1
PS,903-2
CN907
DC 260V IN
P GND
DC 250V
IC101
DC CONV-1
IP-192C-10
15V
6.7A
IC102
DC CONV-2
IP-265C-15
5V
30A
IC103
DC CONV-3
IP-150C-07
5V
15A
+IN
-IN
GATE IN
+OUT
-OUT
+S
-S
TRIM
IC1
MSP7812L
IC2
M5237
IC3
AQV201
IC5
AQV201
IC4
μPC814C
IC6
μPC814C
Q1
DTC144ES
Q2
2SB951-Q
*1
Q3
2SA115-F
Q5
2SA115-F
Q4
2SD1407-Y
Q6
2SD1407-Y
R14
4.7
5W
R34
4.7
5W
RV1;D +5V ADJ
RV2;A +5V ADJ
CN910
+12V OUT
2
PC57,913-2
GND
5
PC57,913-5
R65
150
D11
1SS119
D10
1SS119
CN911
PANEL +12V OUT
21
SMB7, 372
POWER OFF P
2
MB,220-5/SMB7,202-13A/SY/SV
CN908
POWER OFF P
1
PS,905-1
RUSH RLY +12V
2
PS,905-2
GND
3
PS,905-3
GND
4
PS,905-4
FAN +15V
5
PS,905-5
CN911
+15V OUT
20
SMB7, 370
CN911
+15V GND
10
SMB7, 371
PANEL +12V GND
11
SMB7, 373
CN911
D +5V OUT
14
MB, 251
D +5V OUT
15
MB, 249
D +5V OUT
16
MB, 247
CN911
D +5V SENS
3
MB,220-4
CN911
D +5V GND
4
MB, 250
D +5V GND
5
MB, 248
D +5V GND
6
MB, 245
CN911
A +5V OUT
18
MB, 235
A +5V OUT
19
MB, 234
CN911
A +5V SENS
17
MB,220-3
CN911
A +5V GND
7
MB, 244
A +5V GND
8
MB, 236
A +5V GND
9
MB, 231
: POWER DISTRIBUTION TAP
PC-56
1-634-519-11,12
CN910
PC57,913-6
6
-5V IN
PC57,913-4
4
-12V IN
PC57,913-3
3
+12V IN
IC7
μPC339C
IC8
μPC339C
IC9
MC14081BCP
IC10
MC14538BCP
IC11
MC14001BCP
IC12
MC14011BCP
Q7
DTA144ES
Q8
DTC144ES
Q9
DTC144ES
Q10
DTC144ES
Q11
DTC144ES
Q12
DTC144ES
CN910
-5,±12 CONT OUT
1
PC57,913-1
CN911
POP OUT
12
MB,220-2
CN911
AUDIO MUTE C
13
85℃
85℃
CN910
7
POWER SW -1
8
POWER SW -4
CN911
1
POWER SW CONT IN
R52
510
1/2W
R53
11k
R54
1000
R64
47k
R58
47k
R66
47k
C57
22
20V
PS-190
1-634-528-11
S1 LB-265K1,AT-480-KRM,AT712
S1
NC
COM
RED
COM
NC
NO
NO
GRN
R1
560
1/2W
CN915
+12V
1
CN915
POWER CONT
3
CN915
GND
2
VR-93
876-4
877-1
878-3
877-3
878-6
877-2
878-4
PHONE MUTE
+12V
MB-247
211-4
CN113-7C
CN113-11A
ADA-14
220-1
212-3
232
212-6
220-6
212-4
AUD10 MUTE C
PC57,914-1/2

NOTE;

ADDRESS	MARK	CHANGE INFORMATION	SERIAL NO.
G2	*1	Q2 CHANGED 2SB951-R → 2SB951-Q	#10701-

PC-56 BOARD
PS-190 BOARD
POWER SUPPLY (2/2)

HDV-10(J) ;#10001-
HDV-10(UC) ;#10001-
HDV-10(EK) ;#10001-

1
2
3
4
5

A B C D E F G H I J K L M N O

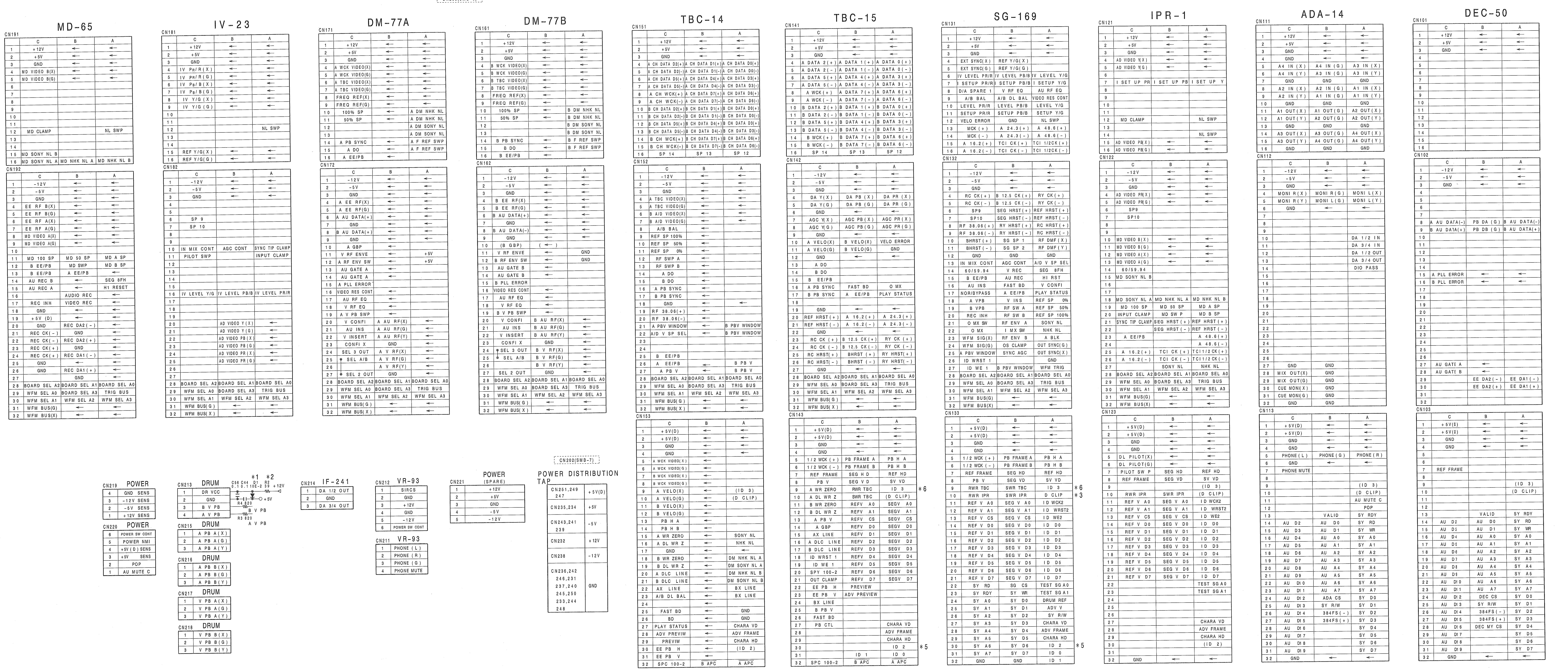
MD-65
IV-23
DM-77A
DM-77B
TBC-14
TBC-15
SG-169
IPR-1
ADA-14
DEC-50
POWER
DRUM
IF-241
VR-93
POWER (SPARE)
POWER DISTRIBUTION TAP
CN203(SMB-8)
CN201(SMB-8)
CN202(SMB-7)

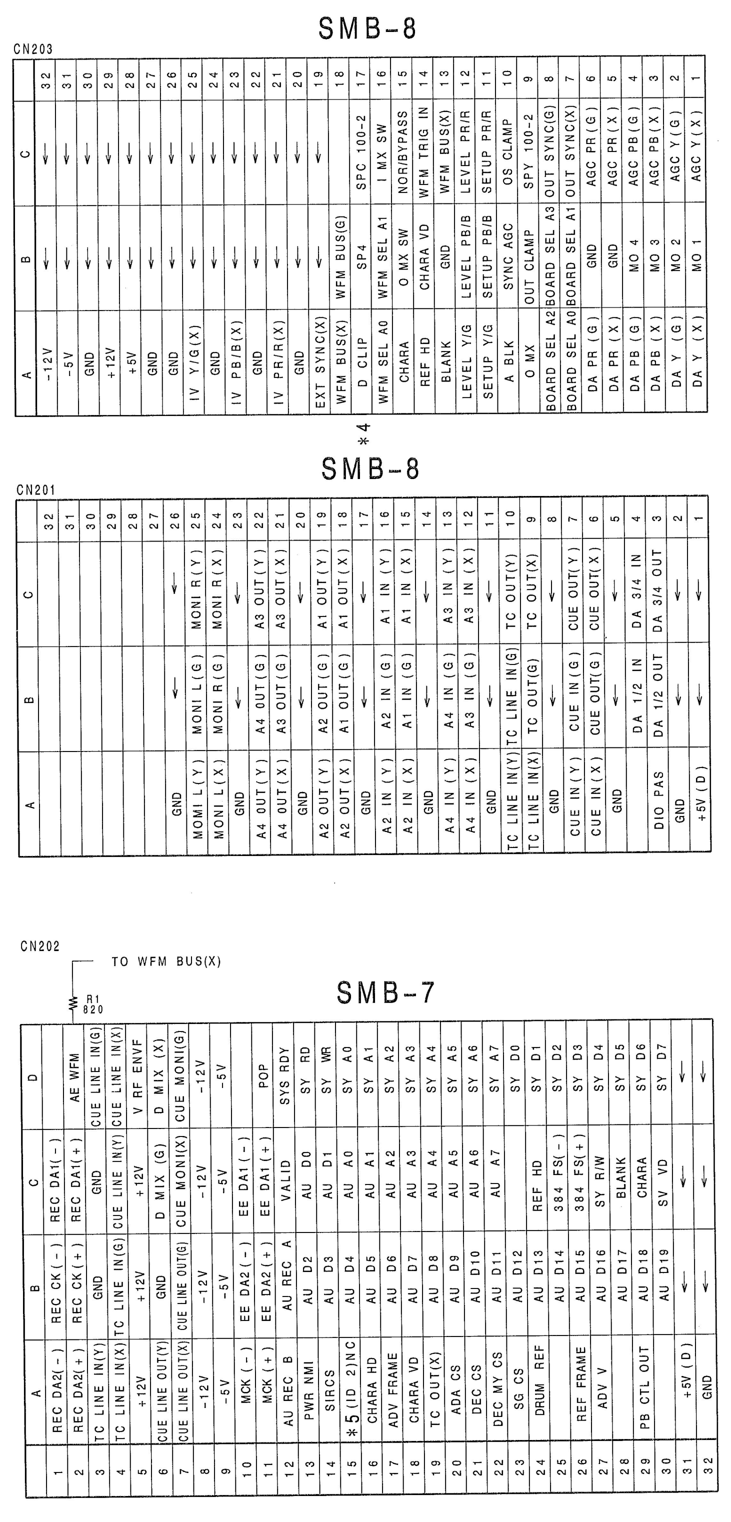
SMB-8
SMB-8
SMB-7
TO WFM BUS(X)

NOTE:

ADDRESS	MARK	CHANGE INFORMATION	SERIAL NO.
D5	*1	D1 10E-2 ADDED	#10201-
	*2	R2 CHANGED 47 → 37	
N2	*3	SP6 → D CLIP CHANGED	
I4	*4	SP3 → D CLIP CHANGED	
N4	*5	SP4 → ID 2 CHANGED	#10301-
H4,J4	*6	SP5 → ID 3 CHANGED	#10801-

MB-247 BOARD (1/4)

BOARD NO.1-634-486-12
HDV-10(J) ;#10001-
HDV-10(UC) ;#10001-
HDV-10(EK) ;#10001-

CARD RACK-1 MB-247(2/4)
MB-247(2/4) CARD RACK-1
CARD RACK-1 MB-247(2/4)
MB-247(2/4) CARD RACK-1
DEC-50
CN101
CN102
CN103
ADA-14
CN111
CN112
CN113
IPR-1
CN121
CN122
CN123
SG-169
CN131
CN132
CN133
TBC-15
CN141
CN142
CN143
TBC-14
CN151
CN152
CN153
DM-77B
CN161
CN162
DM-77A
CN171
CN172
IV-23
CN181
CN182
MD-65
CN191
CN192
SMB-8
CN201
CN203
SMB-7
CN202
VR-93
CN211
CN212
IF-241
CN214
DRUM
CN213
CN215
CN216
CN217
CN218
POWER
CN219
CN220
CN221
384FS(+)
384FS(-)
60/59.94
A CH DATA 0(+)
A CH DATA 0(-)
A APC
A TBC VIDEO(G)
A TBC VIDEO(X)
A BLK
A DLC LINE
A DO
A EF/PB
A AU REF EQ
A GBP
A WR ZERO
A DL WR Z
A PB V
A PB SYNC
A PBV WINDOW
A V PB
A VELO(G)
A VELO(X)
A WCK(+)
A WCK(-)
A WCK VIDEO(G)
A WCK VIDEO(X)
A AU PB(G)
A AU PB(X)
A AU PB(Y)
A/B BAL
A/B DL BAL
A1 IN(G)
A1 IN(Y)
A1 IN(X)
A2 IN(G)
A2 IN(Y)
A2 IN(X)
A3 IN(G)
A3 IN(Y)
A3 IN(X)
A4 IN(G)
A4 IN(Y)
A4 IN(X)
A1 OUT(G)
A1 OUT(Y)
A1 OUT(X)
A2 OUT(G)
A2 OUT(Y)
A2 OUT(X)
A3 OUT(G)
A3 OUT(Y)
A3 OUT(X)
A4 OUT(G)
A4 OUT(Y)
A4 OUT(X)
AD VIDEO PB(G)
AD VIDEO PB(X)
AD VIDEO PB(Y)
AD VIDEO Y(G)
AD VIDEO Y(X)
ADA CS
ADV FRAME
ADV PREVIEW
ADV V
A PLL ERROR
AGC PB(G)
AGC PB(X)
AGC PB(Y)
AGC Y(G)
AGC Y(X)
AU A0
AU A1
AU A2
AU A3
AU A4
AU A5
AU A6
AU A7
AU D0
AU D1
AU D2
AU D3
AU D4
AU D5
AU D6
AU D7
AU D8
AU D9
AU D10
AU D11
AU D12
AU D13
AU D14
AU D15
AU D16
AU D17
AU D18
AU D19
AU GATE A
AU GATE B
AU INS
AU REC
AU REC A
AU REC B
AU MUTE C
AX LINE
B APC
B 12.5 CK(+)
B 12.5 CK(-)
B DATA 0(+)
B DATA 0(-)
B TBC VIDEO(G)
B TBC VIDEO(X)
B AU PB(G)
B AU PB(X)
B AU PB(Y)
B PLL ERROR
B DLC LINE
B DO
B EF/PB
B WR ZERO
B DL WR Z
B PB V
B PBV WINDOW
B V PB
B VELO(G)
B VELO(X)
B WCK(+)
B WCK(-)
B WCK VIDEO(G)
B WCK VIDEO(X)
BHRST(+)
BHRST(-)
BX LINE
DEC-50
CN101
CN102
CN103
ADA-14
CN111
CN112
CN113
IPR-1
CN121
CN122
CN123
SG-169
CN131
CN132
CN133
TBC-15
CN141
CN142
CN143
TBC-14
CN151
CN152
CN153
DM-77B
CN161
CN162
DM-77A
CN171
CN172
IV-23
CN181
CN182
MD-65
CN191
CN192
SMB-8
CN201
CN203
SMB-7
CN202
VR-93
CN211
CN212
IF-241
CN214
DRUM
CN213
CN215
CN216
CN217
CN218
POWER
CN219
CN220
CN221
SIGNAL NAME INDEX
1
3
6
A
B

MB-247 BOARD (2/4)

BOARD NO.1-634-486-12
HDV-10(J) ;#10001-
HDV-10(UC) ;#10001-
HDV-10(EK) ;#10001-

1
2
3
4
5

A B C D E F G H I J K L M N O

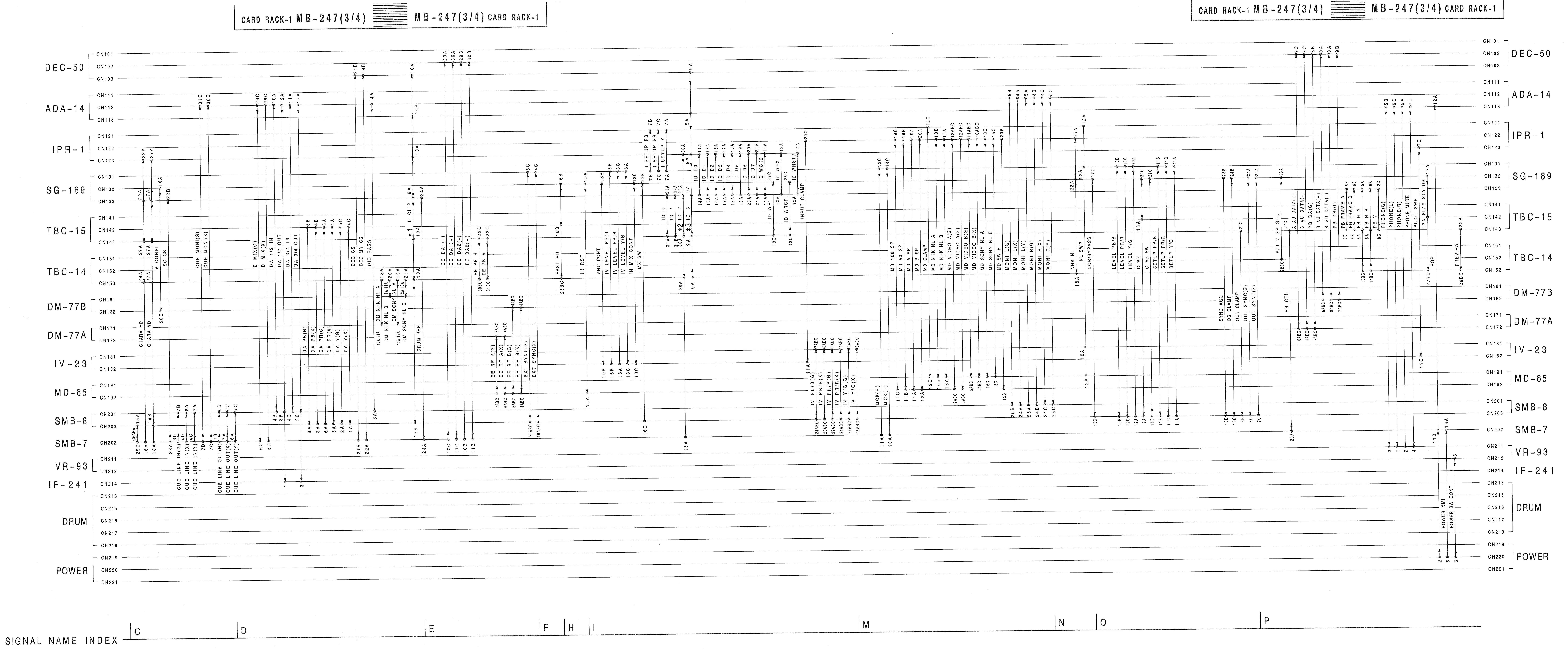
CARD RACK-1 MB-247(3/4)
MB-247(3/4) CARD RACK-1
CARD RACK-1 MB-247(3/4)
MB-247(3/4) CARD RACK-1
DEC-50
ADA-14
IPR-1
SG-169
TBC-15
TBC-14
DM-77B
DM-77A
IV-23
MD-65
SMB-8
SMB-7
VR-93
IF-241
DRUM
POWER
CN101
CN102
CN103
CN111
CN112
CN113
CN121
CN122
CN123
CN131
CN132
CN133
CN141
CN142
CN143
CN151
CN152
CN153
CN161
CN162
CN171
CN172
CN181
CN182
CN191
CN192
CN201
CN203
CN202
CN211
CN212
CN214
CN213
CN215
CN216
CN217
CN218
CN219
CN220
CN221
D CLIP
ID 2
ID 3
POWER NMI
POWER SW CONT
SIGNAL NAME INDEX
C
D
E
F
H
I
M
N
O
P
A
B
C
D
E
F
G
H
I
J
K
L
M
N
O
1
2
3
4
5

NOTE:

ADDRESS	MARK	CHANGE INFORMATION	SERIAL NO.
E3	*1	D CLIP ADDED	#10201-
G2	*2	ID 2 ADDED	#10301-
G2	*3	ID 3 ADDED	#10801-

MB-247 BOARD (3/4)

BOARD NO.1-634-486-12
HDV-10(J) ;#10001-
HDV-10(UC) ;#10001-
HDV-10(EK) ;#10001-

CARD RACK-1 MB-247(4/4)
MB-247(4/4) CARD RACK-1
CARD RACK-1 MB-247(4/4)
MB-247(4/4) CARD RACK-1
DEC-50
CN101
CN102
CN103
ADA-14
CN111
CN112
CN113
IPR-1
CN121
CN122
CN123
SG-169
CN131
CN132
CN133
TBC-15
CN141
CN142
CN143
TBC-14
CN151
CN152
CN153
DM-77B
CN161
CN162
DM-77A
CN171
CN172
IV-23
CN181
CN182
MD-65
CN191
CN192
SMB-8
CN201
CN203
SMB-7
CN202
VR-93
CN211
CN212
IF-241
CN214
CN213
DRUM
CN215
CN216
CN217
CN218
POWER
CN219
CN220
CN221
REC CK(+)
REC CK(-)
REC DA1(+)
REC DA1(-)
REC DA2(+)
REC DA2(-)
REC INH
REF FRAME
REF HD
REF SP
REF SW A
REF SW B
REF V D0
REF V D1
REF V D2
REF V D3
REF V D4
REF V D5
REF V D6
REF V D7
REF V(G)
REF V(R)
RF ENV A
RF ENV B
RF DMF(Y)
RF DMF(X)
V RF ENVF
PWR IPR
PWR TBC
RY CK(+)
RY CK(-)
RY HRST(+)
RY HRST(-)
SEG HRST(+)
SEG HRST(-)
SEG HD
SEG V A0
SEG V A1
SEG V VD
SEG V D0
SEG V D1
SEG V D2
SEG V D3
SEG V D4
SEG V D5
SEG V D6
SEG V D7
SEG SFH
SYNC TIP CLAMP
SONY NL
SIR CS
SP9
SP10
SP11
SP12
SP13
SP14
SPC 100-2
SPY 100-2
SV VD
SWR IPR
SWR TBC
SY A0
SY A1
SY A2
SY A3
SY A4
SY A5
SY A6
SY A7
SY D0
SY D1
SY D2
SY D3
SY D4
SY D5
SY D6
SY D7
SY RW
SY RD
SY WR
SY RDY
TC LINE IN(G)
TC LINE IN(X)
TC LINE IN(Y)
TC OUT(X)
TEST SG A0
TEST SG A1
TRIG BUS
V REF EQ
V INS
V PB A(G)
V PB A(Y)
V PB A(X)
V PB B(G)
V PB B(X)
V PB B(Y)
V REC
VALID
VELO ERROR
VIDEO RES CONT
WFM BUS(G)
WFM BUS(X)
WFM BUS(Y)
WFM SEL A0
WFM SEL A1
WFM SEL A2
WFM SEL A3
WFM SIG(G)
WFM SIG(X)
WFM TRIG
AE WFM
SIGNAL NAME INDEX
R
S
T
V
W
+5V
+5V(D)
-5V
+12V
-12V
GND

MB-247 BOARD (4/4)

BOARD NO.1-634-486-12
HDV-10(J) ;#10001-
HDV-10(UC) ;#10001-
HDV-10(EK) ;#10001-

RM-68

CN380

1	ADV V	2	GND(T)
3	DRUM REF	4	GND(T)
5	DRUM PG INT	6	GND(T)
7	DRUM FG INT	8	GND(T)
9	CAP FG INT	10	RM READY
11	PB CTL OUT	12	-12V
13	+12V	14	SY/SV READY
15	CAP DRIVE	16	CAP DRIVE
17	RM TEST P	18	RM RESET
19	RM R/W	20	GND
21	RM WR	22	GND
23	RM RD	24	GND
25	RM CS	26	-5V
27	RM A10	28	RM A9
29	RM A8	30	RM A7
31	RM A6	32	RM A5
33	RM A4	34	RM A3
35	RM A2	36	RM A1
37	RM A0	38	GND
39	RM D7	40	RM D6
41	RM D5	42	RM D4
43	RM D3	44	RM D2
45	RM D1	46	RM D0
47	+5V(D)	48	GND
49	RM CLK(+)	50	RM CLK(-)

DRUM MOTOR

CN358

1	DRUM U
2	DRUM W
3	DRUM V
4	DRUM HOT
5	DRUM COLD
6	DRUM IC1-1
7	DRUM IC1-2
8	DRUM IC1-3
9	DRUM IC1-4
10	DRUM IC1-5
11	DRUM IC1-6
12	DRUM DIR

RM-68

CN381

1	+15V HOT
2	+15V HOT
3	+15V COLD
4	+15V COLD

SUPPLY REEL MOTOR

CN359

1	S REEL DIR
2	S REEL COLD
3	S REEL HOT
4	S REEL WH
5	S REEL VH
6	S REEL UH
7	S REEL WL
8	S REEL VL
9	S REEL UL
10	S REEL W
11	S REEL V
12	S REEL U

TAKEUP REEL MOTOR

CN360

1	T REEL DIR
2	T REEL COLD
3	T REEL HOT
4	T REEL WH
5	T REEL VH
6	T REEL UH
7	T REEL WL
8	T REEL VL
9	T REEL UL
10	T REEL W
11	T REEL V
12	T REEL U

SV-116

CN300

	C	B	A	
1	GND	GND	GND	1
2	+5V(D)	+5V(D)	+5V(D)	2
3	SY D7	SV VD	DP CS	3
4	SY D6	RM TEST P	PB CTL OUT	4
5	SY D5			5
6	SY D4	SYS R/W		6
7	SY D3	RM A11	REF FRAME	7
8	SY D2	RM A10		8
9	SY D1	RM A9		9
10	SY D0	RM A8	SG CS	10
11	SY A7	V INT	SY/SV READY	11
12	SY A6	48V INT	DEC CS	12
13	SY A5	SV BUSY	ADA CS	13
14	SY A4	SV NMI	PWR NMI	14
15	SY A3	SY NMI	DRUM PG INT	15
16	SY A2	SPARE 0	DRUM FG INT	16
17	SY A1	RM R/W	CAP FG INT	17
18	SY A0	RM RESET	RM READY	18
19	SY WR	RM WR	RM CLK(+)	19
20	SY RD	RM RD	RM CLK(-)	20
21	SYSTEM READY	RM CS	CTL PB	21
22	POP	AE CS	CTL REC	22
23	RM D7	RM A7	SV CS	23
24	RM D6	RM A6	ED CS	24
25	RM D5	RM A5	SY A11	25
26	RM D4	RM A4	SY A10	26
27	RM D3	RM A3	SY A9	27
28	RM D2	RM A2	SY A8	28
29	RM D1	RM A1	IFCS1	29
30	RM D0	RM A0	IFCS0	30
31	-5V	-5V	-5V	31
32	GND	GND	GND	32

SV-116

CN301

	C	B	A	
1	GND	GND	GND	1
2	-12V	-12V	-12V	2
3	CUE METER(X)	CUE METER(G)	RF METER	3
4				4
5			+15V HOT	5
6			+15V HOT	6
7			+15V COLD	7
8			+15V COLD	8
9	CAP DRIVE			9
10	DRUM U	DRUM IC1-1	DRUM IC1-2	10
11	DRUM W	DRUM IC1-3	DRUM IC1-4	11
12	DRUM V	DRUM IC1-5	DRUM IC1-6	12
13	DRUM HOT	DRUM COLD	DRUM DIR	13
14	S REEL DIR	S REEL COLD	S REEL HOT	14
15	S REEL WH	S REEL VH	S REEL UH	15
16	S REEL WL	S REEL VL	S REEL UL	16
17	S REEL W	S REEL V	S REEL U	17
18	T REEL DIR	T REEL COLD	T REEL HOT	18
19	T REEL WH	T REEL VH	T REEL UH	19
20	T REEL WL	T REEL VL	T REEL UL	20
21	T REEL W	T REEL V	T REEL U	21
22				22
23				23
24				24
25				25
26			320fs(+)	26
27			320fs(-)	27
28				28
29				29
30			ENC CS	30
31	+12V	+12V	+12V	31
32	GND	GND	GND	32

AE-08

CN310

	C	B	A	
1	GND	GND	GND	1
2	+5V(D)	+5V(D)	+5V(D)	2
3			SY D7	3
4			SY D6	4
5			SY D5	5
6			SY D4	6
7			SY D3	7
8			SY D2	8
9			SY D1	9
10			SY D0	10
11			SY A7	11
12			SY A6	12
13			SY A5	13
14			SY A4	14
15			SY A3	15
16	TC LINE OUT		SY A2	16
17			SY A1	17
18	SYS R/W		SY A0	18
19			SY WR	19
20			SY RD	20
21	CTL PB		SYSTEM READY	21
22	CTL REC	DA CLK(+)	DA CLK(-)	22
23		TC GEN	EXT TC	23
24		TC READ		24
25		AE CS		25
26				26
27				27
28				28
29				29
30				30
31	-5V	-5V	-5V	31
32	GND	GND	GND	32

AE-08

CN311

	C	B	A	
1	GND	GND	GND	1
2	-12V	-12V	-12V	2
3	CUE METER(X)	CUE METER(G)	AE WFM OUT(X)	3
4	GND(T)	CUE MONI(X)	CUE MONI(G)	4
5	GND	GND		5
6	DMIX IN(X)	DMIX IN(G)		6
7	GND	GND		7
8	CUE LINE OUT(X)	CUE LINE OUT(Y)		8
9	GND	CUE LINE OUT(G)	GND	9
10	CUE LINE IN(X)	CUE LINE IN(Y)	CUE LINE IN(G)	10
11	GND	GND	GND	11
12	TC LINE IN(X)	TC LINE IN(Y)	TC LINE IN(G)	12
13	GND	GND	GND	13
14	CTL R/P HEAD(G)	CTL R/P HEAD(X)	CTL R/P HEAD(Y)	14
15	CTL R/P HEAD(G)	CTL R/P HEAD(Y)	CTL R/P HEAD(X)	15
16	GND	GND	GND	16
17	TC R/P HEAD(G)	TC R/P HEAD(X)	TC R/P HEAD(Y)	17
18	TC R/P HEAD(G)	TC R/P HEAD(Y)	TC R/P HEAD(X)	18
19	GND	GND	GND	19
20	CUE R/P HEAD(G)	CUE R/P HEAD(X)	CUE R/P HEAD(Y)	20
21	CUE R/P HEAD(G)	CUE R/P HEAD(Y)	CUE R/P HEAD(X)	21
22	GND	GND	GND	22
23	GND	GND	GND	23
24	GND(T)	GND	CUE ERS HEAD(X)	24
25	GND(T)	CUE ERS HEAD(G)	CUE ERS HEAD(Y)	25
26	GND(T)	GND	TC ERS HEAD(X)	26
27	GND(T)	TC ERS HEAD(G)	TC ERS HEAD(Y)	27
28	GND(T)	GND	FULL ERS HEAD(X)	28
29	GND(T)	FULL ERS HEAD(G)	FULL ERS HEAD(Y)	29
30	GND	GND	GND	30
31	+12V	+12V	+12V	31
32	GND	GND	GND	32

SW-352

CN362

1	DP CS
2	SY D7
3	SY D6
4	SY D5
5	AD CLK(+)
6	AD CLK(-)
7	R/W
8	SY D4
9	+5V(D)
10	SY D3
11	+5V(D)
12	SY D2
13	+5V(D)
14	SY D1
15	GND
16	SY D0
17	GND
18	GND
19	GND
20	SY A4
21	+12V
22	SY A3
23	SY A2
24	SY A1
25	+12V
26	SY A0
27	SY WR
28	SY RD
29	-5V
30	SYSTEM READY

CUE TC CTL R/P HEAD

CN363

1	CUE R/P(G)
2	CUE R/P(Y)
3	CUE R/P(X)
4	TC R/P(G)
5	TC R/P(Y)
6	TC R/P(X)
7	CTL R/P(G)
8	CTL R/P(Y)
9	CTL R/P(X)

ERASE HEAD

CN364

1	CTL ERS(G)
2	CTL ERS(Y)
3	CTL ERS(X)
4	FULL ERS(G)
5	FULL ERS(Y)
6	FULL ERS(X)
7	TC ERS(G)
8	TC ERS(Y)
9	TC ERS(X)
10	CUE ERS(G)
11	CUE ERS(Y)
12	CUE ERS(X)

SY-144

CN320

	C	B	A	
1	GND	GND	GND	1
2	+5V(D)	+5V(D)	+5V(D)	2
3	SY D7	SV VD	DP CS	3
4	SY D6	CHARA	AD CLK(+)	4
5	SY D5	BLANK	AD CLK(-)	5
6	SY D4		SYS R/W	6
7	SY D3		REF FRAME	7
8	SY D2			8
9	SY D1		REF HD	9
10	SY D0		SG CS	10
11	SY A7	V INT	DEC MY CS	11
12	SY A6	48V INT	DEC CS	12
13	SY A5	SV BUSY	ADA CS	13
14	SY A4	SV NMI	TC OUT	14
15	SY A3	SY NMI	CHARA VD	15
16	SY A2	SPARE 0	ADV FRM	16
17	SY A1		CHARA HD	17
18	SY A0		*1 (ID 2)NC	18
19	SY WR		SIRCS	19
20	SY RD		PWR NMI	20
21	SYSTEM READY			21
22	POP	EXT TC		22
23	TC GEN	SY D15	SY A15	23
24	TC READ	SY D14	SY A14	24
25	AE CS	SY D13	SY A13	25
26	SV CS	SY D12	SY A12	26
27	ED CS	SY D11	SY A11	27
28	ED MY CS	SY D10	SY A10	28
29	ED DIAG CS	SY D9	SY A9	29
30	UBE	SY D8	SY A8	30
31	-5V	-5V	-5V	31
32	GND	GND	GND	32

SY-144

CN321

	C	B	A	
1	GND	GND	GND	1
2				2
3	IF D7	IF A7	IF READY	3
4	IF D6	IF A6	HM INT	4
5	IF D5	IF A5		5
6	IF D4	IF A4		6
7	IF D3	IF A3	HM CLK	7
8	IF D2	IF A2	RS232C TX	8
9	IF D1	IF A1	RS232C RX	9
10	IF D0	IF A0	RCP TX	10
11	IF RD	IF WR	RCP RX	11
12	IF CS0	IF CS1	LCP TX	12
13	IF CTL3	IF CTL4	LCP RX	13
14	IF CTL0	IF CTL1	IF CTL2	14
15	CTS	RTS	IF STS0	15
16	RESET	DSR	DTR	16
17	RESET		R/W	17
18				18
19			SIRCS	19
20				20
21				21
22				22
23		ED BUSY	ENC FRAME	23
24			480fs(+)	24
25			480fs(-)	25
26			320fs(+)	26
27			320fs(-)	27
28			384fs(+)	28
29			384fs(-)	29
30		ENC MY CS	ENC CS	30
31				31
32	GND	GND	GND	32

ED-23

CN330

	C	B	A	
1	GND	GND	GND	1
2	+5V(D)	+5V(D)	+5V(D)	2
3	SY D7	SV VD	AU D19	3
4	SY D6		AU D18	4
5	SY D5		AU D17	5
6	SY D4	SYS R/W	AU D16	6
7	SY D3	384fs(+)	AU D15	7
8	SY D2	384fs(-)	AU D14	8
9	SY D1	REF HD	AU D13	9
10	SY D0		AU D12	10
11	SY A7	AU A7	AU D11	11
12	SY A6	AU A6	AU D10	12
13	SY A5	AU A5	AU D9	13
14	SY A4	AU A4	AU D8	14
15	SY A3	AU A3	AU D7	15
16	SY A2	AU A2	AU D6	16
17	SY A1	AU A1	AU D5	17
18	SY A0	AU A0	AU D4	18
19	SY WR	AUD1	AU D3	19
20	SY RD	AUD0	AU D2	20
21	SYSTEM READY	VALID		21
22	DA CLK(+)	DA CLK(-)		22
23		SY D15	SY A15	23
24		SY D14	SY A14	24
25		SY D13	SY A13	25
26		SY D12	SY A12	26
27	ED CS	SY D11	SY A11	27
28	ED MY CS	SY D10	SY A10	28
29	ED DIAG CS	SY D9	SY A9	29
30	UBE	SY D8	SY A8	30
31	-5V	-5V	-5V	31
32	GND	GND	GND	32

ED-23

CN331

	C	B	A	
1	GND	GND	GND	1
2				2
3				3
4				4
5				5
6				6
7				7
8				8
9				9
10				10
11				11
12				12
13				13
14				14
15				15
16				16
17				17
18				18
19				19
20				20
21				21
22				22
23	ED BUSY			23
24	480fs(+)			24
25	480fs(-)			25
26	320fs(+)		960fs(+)	26
27	320fs(-)		960fs(-)	27
28	384fs(+)			28
29	384fs(-)			29
30				30
31	+12V	+12V	+12V	31
32	GND	GND	GND	32

MB-247

CN202

	D	C	B	A	
32	GND	GND	GND	GND	32
31	+5V(D)	+5V(D)	+5V(D)	+5V(D)	31
30	SY D7	SV VD	AU D19		30
29	SY D6	CHARA	AU D18	PB CTL OUT	29
28	SY D5	BLANK	AU D17		28
27	SY D4	SYS R/W	AU D16	ADV V	27
26	SY D3	384fs(+)	AU D15	REF FRAME	26
25	SY D2	384fs(-)	AU D14		25
24	SY D1	REF HD	AU D13	DRUM REF	24
23	SY D0		AU D12	SG CS	23
22	SY A7	AU A7	AU D11	DEC MY CS	22
21	SY A6	AU A6	AU D10	DEC CS	21
20	SY A5	AU A5	AU D9	ADA CS	20
19	SY A4	AU A4	AU D8	TC LINE OUT	19
18	SY A3	AU A3	AU D7	CHARA VD	18
17	SY A2	AU A2	AU D6	ADV FRAME	17
16	SY A1	AU A1	AU D5	CHARA HD	16
15	SY A0	AU A0	AU D4	*1 (ID 2)NC	15
14	SY WR	AU D1	AU D3	SIR CS	14
13	SY RD	AU D0	AU D2	PWRNMI	13
12	SYSTEM READY	VALID	AU REC A	AU REC B	12
11	POP	EE DA1(+)	EE DA2(+)	MCK(+)	11
10		EE DA1(-)	EE DA2(-)	(-)	10
9	-5V	-5V	-5V	-5V	9
8	-12V	-12V	-12V	-12V	8
7	CUE MONI(G)	CUE MONI(X)	CUE LINE OUT(G)	CUE LINE OUT(X)	7
6	D MIX(X)	D MIX(G)	GND	CUE LINE OUT(Y)	6
5	RF METER	+12V	+12V	+12V	5
4	CUE LINE IN(X)	CUE LINE IN(Y)	TC LINE IN(G)	TC LINE IN(X)	4
3	CUE LINE IN(G)	GND	GND	TC LINE IN(Y)	3
2	AE WFM	REC DA1(+)	REC CK(+)	REC DA2(+)	2
1		REC DA1(-)	REC CK(-)	REC DA2(-)	1

IF-241

CN365

1	+5V(D)	31	IFA0
2	IF12V HOT	32	IFD0
3	+5V(D)	33	RCP RX
4	IF12V HOT	34	IF WR
5		35	IF RD
6	IF12V HOT	36	LCP TX
7	+15V HOT	37	IF CS1
8	+15V COLD	38	IF CS0
9	+15V HOT	39	LCP RX
10	+15V COLD	40	IF CTL4
11	IF RDY	41	IF CTL3
12	IF A7	42	IF CTL2
13	IF D7	43	IF CTL1
14	HM INT	44	IF CTL0
15	IF A6	45	IF STS0
16	IF D6	46	GND(T)
17	IF A5	47	GND
18	IF D5	48	GND
19	IF A4	49	GND
20	IF D4	50	GND
21	HM CLK	51	RTS
22	IF A3	52	CTS
23	IF D3	53	DTR
24	RS232C TX	54	DSR
25	IF A2	55	RESET
26	IF D2	56	R/W
27	RS232C RX	57	
28	IF A1	58	
29	IF D1	59	
30	RCP TX	60	

NOTE;

ADDRESS	MARK	CHANGE INFORMATION	SERIAL NO.
I2,M2	*1	SPARE 4 → (ID 2)NC	#10301-

BOTTOM SIDE FAN MOTOR

CN366

3	+15V HOT
2	
1	+15V COLD

POWER DISTRIBUTION TAP

CN370	+15V (HOT)
CN371	+15V (COLD)
CN372	IF12V (HOT)
CN373	IF12V (COLD)

ENC-12

CN340

	C	B	A	
1	GND	GND	GND	1
2	+5V(D)	+5V(D)	+5V(D)	2
3	SY D7		AU D19	3
4	SY D6		AU D18	4
5	SY D5		AU D17	5
6	SY D4	SYS R/W	AU D16	6
7	SY D3	REF FRAME	AU D15	7
8	SY D2		AU D14	8
9	SY D1		AU D13	9
10	SY D0		AU D12	10
11	SY A7	AU A7	AU D11	11
12	SY A6	AU A6	AU D10	12
13	SY A5	AU A5	AU D9	13
14	SY A4	AU A4	AU D8	14
15	SY A3	AU A3	AU D7	15
16	SY A2	AU A2	AU D6	16
17	SY A1	AU A1	AU D5	17
18	SY A0	AU A0	AU D4	18
19	SY WR	AU D1	AU D3	19
20	SY RD	AU D0	AU D2	20
21	SYSTEM READY	VALID		21
22	MCK(+)	AU REC A		22
23	MCK(-)	AU REC B		23
24	EE DA1(+)	EE DA2(+)		24
25	EE DA1(-)	EE DA2(-)		25
26				26
27				27
28				28
29				29
30				30
31	-5V	-5V	-5V	31
32	GND	GND	GND	32

ENC-12

CN341

	C	B	A	
1	GND	GND	GND	1
2				2
3	REC DA1(+)	REC CK(+)	REC DA2(+)	3
4	REC DA1(-)	REC CK(-)	REC DA2(-)	4
5				5
6				6
7				7
8				8
9				9
10				10
11				11
12				12
13				13
14				14
15				15
16				16
17				17
18				18
19				19
20				20
21				21
22				22
23				23
24				24
25				25
26	960fs(+)			26
27	960fs(-)			27
28				28
29				29
30	ENC MY CS	ENC CS		30
31				31
32	GND	GND	GND	32

SMB-7 BOARD (1/3)

BOARD NO.1-634-487-11,12
HDV-10(J) ;#10001-
HDV-10(UC) ;#10001-
HDV-10(EK) ;#10001-

SV-116
CN300
CN301
AE-08
CN310
CN311
SY-144
CN320
CN321
ED-23
CN330
CN331
ENC-12
CN340
CN341
MB-247
CN202
DRUM
CN358
S REEL MOTOR
CN359
T REEL MOTOR
CN360
CUE,TC,CTL,R/P HEAD
CN363
ERS HEAD
CN364
IF-241
CN365
RM-68
CN380
CN381
SW-352
CN362
BOTTOM SIDE FAN MOTOR
CN366
+15V HOT
CN370
+15V COLD
CN371
IF 12V HOT
CN372
IF 12V GND
CN373
IF 12V(HOT)
IF 12V(GND)
SIGNAL NAME INDEX
3
4
9
A
B
C
D
E
F
H
I
L
M
O
P

1
2
3
4
5

NOTE;

ADDRESS	MARK	CHANGE INFORMATION	SERIAL NO.
K2	＊1	SPARE 4 → (ID 2)NC CHANGED	#10301-

SMB-7 BOARD (2/3)

BOARD NO.1-634-487-11,12
HDV-10(J) ;#10001-
HDV-10(UC) ;#10001-
HDV-10(EK) ;#10001-

A B C D E F G H I J K L M N O

SV-116
CN300
CN301
AE-08
CN310
CN311
SY-144
CN320
CN321
ED-23
CN330
CN331
ENC-12
CN340
CN341
MB-247
CN202
DRUM
CN358
S REEL MOTOR
CN359
T REEL MOTOR
CN360
CUE,TC,CTL,R/P HEAD
CN363
ERS HEAD
CN364
IF-241
CN365
RM-68
CN380
CN381
SW-352
CN362
BOTTOM SIDE FAN MOTOR
CN366
+15V HOT
CN370
+15V COLD
CN371
IF 12V HOT
CN372
IF 12V GND
CN373
SIGNAL NAME INDEX
R
S
T
U
V
W
+5V
-5V
+12V
-12V
+15V
GND
SYS R/W
RCP RX
RCP TX
REF FRAME
RESET
RM CLK(+)
RM CLK(-)
RF METER
RM R/W
RM READY
RM RESET
RM WR
RS232C RX
RS232C TX
RTS
SPARE 0
SV BUSY
SV CS
SV NMI
SV RD
SV WR
SYSV READY
S REEL COLD
S REEL DIR
S REEL HOT
S REEL U
S REEL UH
S REEL UL
S REEL V
S REEL VH
S REEL VL
S REEL W
S REEL WH
S REEL WL
SIRCS
SYSTEM READY
T REEL COLD
T REEL DIR
T REEL HOT
T REEL U
T REEL UH
T REEL UL
T REEL V
T REEL VH
T REEL VL
T REEL W
T REEL WH
T REEL WL
TC ERS HEAD(G)
TC ERS HEAD(X)
TC ERS HEAD(Y)
TC GEN
TC LINE IN(G)
TC LINE IN(X)
TC LINE IN(Y)
TC LINE OUT
TC R/P HEAD(G)
TC R/P HEAD(X)
TC R/P HEAD(Y)
TC READ
RM TEST P
SV VD
V INT
VALID
AE WFM
RB1 10KX8
RB2 10KX8
RB3 10KX8
RB4 10KX8
RB5 10KX8
RB6 10KX8
C2
+5V
+15V HOT
+15V COLD
GND

SMB-7 BOARD (3/3)

BOARD NO.1-634-487-11,12
HDV-10(J) ;#10001-
HDV-10(UC) ;#10001-
HDV-10(EK) ;#10001-

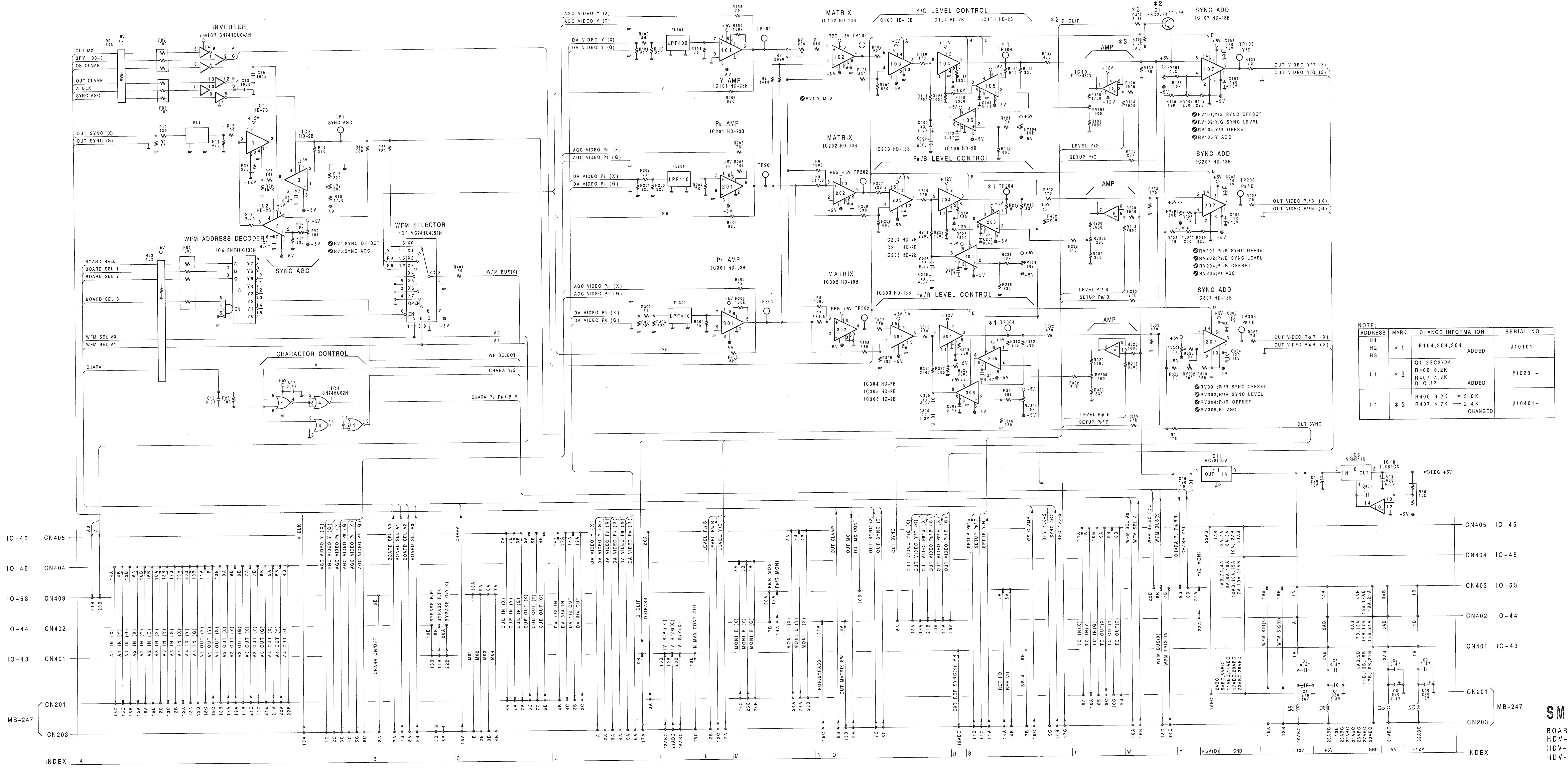
INVERTER
IC7 SN74HCU04AN
IC1 HD-7B
IC3 HD-2B
TP1 SYNC AGC
IC2 HD-2B
SYNC AGC
RV2;SYNC OFFSET
RV3;SYNC AGC
WFM ADDRESS DECODER
IC5 SN74HC138N
WFM SELECTOR
IC6 MC74HC4051N
WFM BUS(X)
CHARACTOR CONTROL
IC4 SN74HC02N
WF SELECT
CHARA Y/G
CHARA PB PR/B R
Y AMP
IC101 HD-23B
LPF409
PB AMP
IC201 HD-23B
LPF410
PR AMP
IC301 HD-23B
MATRIX
IC102 HD-10B
IC202 HD-10B
IC302 HD-10B
RV1;Y MTX
Y/G LEVEL CONTROL
IC103 HD-13B
IC104 HD-7B
IC105 HD-2B
IC106 HD-2B
PB/B LEVEL CONTROL
IC203 HD-13B
IC204 HD-7B
IC205 HD-2B
IC206 HD-2B
PR/R LEVEL CONTROL
IC303 HD-13B
IC304 HD-7B
IC305 HD-2B
IC306 HD-2B
AMP
IC10 TL084CN
SYNC ADD
IC107 HD-13B
IC207 HD-13B
IC307 HD-13B
Q1 2SC2724
D CLIP
RV101;Y/G SYNC OFFSET
RV102;Y/G SYNC LEVEL
RV104;Y/G OFFSET
RV105;Y AGC
RV201;PB/B SYNC OFFSET
RV202;PB/B SYNC LEVEL
RV204;PB/B OFFSET
RV205;PB AGC
RV301;PR/R SYNC OFFSET
RV302;PR/R SYNC LEVEL
RV304;PR/R OFFSET
RV305;PR AGC
OUT VIDEO Y/G (X)
OUT VIDEO Y/G (G)
OUT VIDEO PB/B (X)
OUT VIDEO PB/B (G)
OUT VIDEO PR/R (X)
OUT VIDEO PR/R (G)
OUT SYNC
IC11 RC78L05A
IC8 MSN317N
REG +5V
CN405 IO-46
CN404 IO-45
CN403 IO-53
CN402 IO-44
CN401 IO-43
CN201
CN203
MB-247
INDEX
1
2
3
4
5
A
B
C
D
E
F
G
H
I
J
K
L

NOTE;

ADDRESS	MARK	CHANGE INFORMATION	SERIAL NO.
H1 H2 H3	＊1	TP104,204,304 ADDED	#10101-
I 1	＊2	Q1 2SC2724 R406 6.2K R407 4.7K D CLIP ADDED	#10201-
I 1	＊3	R406 6.2K → 3.0K R407 4.7K → 2.4K CHANGED	#10401-

SMB-8 BOARD (1/2)

BOARD NO.1-634-488-11,12,13,14
HDV-10(J) ;#10001-
HDV-10(UC) ;#10001-
HDV-10(EK) ;#10001-

AUDIO
DIGITAL IN
MONITOR L OUT

IO-46

CN405

	A	B
22	+5V (D)	+5V (D)
21	GND	GND
20	DIO PASS	
19	DA3/4 OUT	
18	DA1/2 OUT	
17	DA3/4 IN	
16	DA1/2 IN	
15		
14		
13		
12	GND	GND
11	TC IN(X)	TC IN(Y)
10	GND	TC IN(G)
9	TC OUT(X)	TC OUT(Y)
8	GND	TC OUT(G)
7	CUE IN(X)	CUE IN(Y)
6	GND	CUE IN(G)
5	CUE OUT(X)	CUE OUT(Y)
4	GND	CUE OUT(G)
3	MONI L(X)	MONI L(Y)
2	GND	MONI L(G)
1	GND	GND

AUDIO
ANALOG IN
MONITOR R OUT

IO-45

CN404

	A	B
22		
21	GND	GND
20	A4 IN(X)	A4 IN(Y)
19	GND	A4 IN(G)
18	A3 IN(X)	A3 IN(Y)
17	GND	A3 IN(G)
16	A2 IN(X)	A2 IN(Y)
15	GND	A2 IN(G)
14	A1 IN(X)	A1 IN(Y)
13	GND	A1 IN(G)
12	GND	GND
11	A1 OUT(X)	A1 OUT(Y)
10	GND	A1 OUT(G)
9	A2 OUT(X)	A2 OUT(Y)
8	GND	A2 OUT(G)
7	A3 OUT(X)	A3 OUT(Y)
6	GND	A3 OUT(G)
5	A4 OUT(X)	A4 OUT(Y)
4	GND	A4 OUT(G)
3	MONI R(X)	MONI R(Y)
2	GND	MONI R(G)
1	GND	GND

MONITOR

IO-53

CN403

	A	B
22	Y/G MONI IN	WF SELECT:L
21	GND	A0
20	PB/B MONI IN	A1
19	GND	WFM SIG IN(X)
18	PR/R MONI IN	WFM SIG (G)
17	GND	GND
16		WFM BUS(X)
15		GND
14		
13		
12		
11		
10	MO1	OUT MATRIX CONT
9	MO2	CHARA PB PR/BR
8	MO3	CHARA Y/G
7	MO4	WFM TRIG IN
6	SPEAR-2	CHARA ON/OFF
5	SPEAR-1	
4	GND	GND
3	-5V	-5V
2	+5V	+5V
1	+12V	-12V

VIDEO
OUT

IO-44

CN402

	A	B
22	Y/G MONI	NOR/BYPASS
21	GND	OUT VIDEO PB (X)
20	BYPASS G/Y(X)	GND
19	GND	BYPASS B/PB
18	OUT VIDEO Y/G(X)	GND
17	GND	PB/B MONI
16		GND
15		
14	PR/R MONI	
13	GND	
12		
11	OUT VIDEO PR/R(X)	
10	GND	
9		
8		BYPASS PR/R(X)
7		GND
6	OUT MATRIX SW	
5	OUT SYNC	
4	GND	GND
3	-5V	-5V
2	+5V	+5V
1	+12V	-12V

VIDEO
IN

IO-43

CN401

	A	B
22		BYPASS G/Y(X)
21		GND
20		IV G/Y(X)
19		GND
18		BYPASS B/PB (X)
17		GND
16		IV B/PB (X)
15		GND
14		BYPASS R/PR (X)
13		GND
12		IV R/PR (X)
11		GND
10		IN MAX CONT OUT
9		D CLIP *1
8		SP-4
7		SP-5
6		EXT REF SYNC(X)
5		GND
4	GND	GND
3	-5V	-5V
2	+5V	+5V
1	+12V	-12V

MB-247

CN201

	A	B	C
1	+5V (D)	+5V (D)	+5V (D)
2	GND	GND	GND
3	DIOPASS	DA1/2 OUT	DA3/4 OUT
4		DA1/2 IN	DA3/4 IN
5	GND	GND	GND
6	CUE IN(X)	CUE OUT(G)	CUE OUT(X)
7	CUE IN(Y)	CUE IN(G)	CUE OUT(Y)
8	GND	GND	GND
9	TC IN(X)	TC OUT(G)	TC OUT(X)
10	TC IN(Y)	TC IN(G)	TC OUT(Y)
11	GND	GND	GND
12	A4 IN(X)	A3 IN(G)	A3 IN(X)
13	A4 IN(Y)	A4 IN(G)	A3 IN(Y)
14	GND	GND	GND
15	A2 IN(X)	A1 IN(G)	A1 IN(X)
16	A2 IN(Y)	A2 IN(G)	A1 IN(Y)
17	GND	GND	GND
18	A2 OUT(X)	A1 OUT(G)	A1 OUT(X)
19	A2 OUT(Y)	A2 OUT(G)	A1 OUT(Y)
20	GND	GND	GND
21	A4 OUT(X)	A3 OUT(G)	A3 OUT(X)
22	A4 OUT(Y)	A4 OUT(G)	A3 OUT(Y)
23	GND	GND	GND
24	MONI L(X)	MONI R(G)	MONI R(X)
25	MONI L(Y)	MONI L(G)	MONI R(Y)
26	GND	GND	GND
27			
28			
29			
30			
31			
32			

MB-247

CN203

	A	B	C
1	DA VIDEO Y(X)	MO 1	AGC VIDEO Y(X)
2	DA VIDEO Y(G)	MO 2	AGC VIDEO Y(G)
3	DA VIDEO PB(X)	MO 3	AGC VIDEO PB(X)
4	DA VIDEO PB(G)	MO 4	AGC VIDEO PB(G)
5	DA VIDEO PR(X)	GND	AGC VIDEO PR(X)
6	DA VIDEO PR(G)	GND	AGC VIDEO PR(G)
7	BOARD SEL A0	BOARD SEL A1	OUT SYNC(X)
8	BOARD SEL A2	BOARD SEL A3	OUT SYNC(G)
9	OUT MX	OUT CLAMP	SPY 100-2
10	A BLK	SYNC AGC	OS CLAMP
11	SETUP Y/G	SETUP PB/ B	SETUP PR/ R
12	LEVEL Y/G	LEVEL PB/ B	LEVEL PR/ R
13	CHARA ON/OFF	GND	WFM BUS(X)
14	REF HD	REF VD	WFM TRIG IN
15	CHARA	OUT MATRIX SW	NOR/BYPASS
16	WFM SEL A0	WFM SEL A1	I MX SW
17 *1	D CLIP	SP-4	SPC100-2
18	WFM BUS(X)	WFM BUS(G)	
19	EXT SYNC(X)	↓	↓
20	GND	GND	GND
21	IV PR(X)	↓	↓
22	GND	GND	GND
23	IV PB(X)	↓	↓
24	GND	GND	GND
25	IV Y(X)	↓	↓
26	GND	GND	GND
27	GND	GND	GND
28	+5V	+5V	+5V
29	+12V	+12V	+12V
30	GND	GND	GND
31	-5V	-5V	-5V
32	-12V	-12V	-12V

NOTE:

ADDRESS	MARK	CHANGE INFORMATION	SERIAL NO.
G5 H2	*1	SP-3 → D CLIP CHANGED	#10201-

SMB-8 BOARD (2/2)

BOARD NO.1-634-488-11,12,13,14
HDV-10(J) ;#10001-
HDV-10(UC) ;#10001-
HDV-10(EK) ;#10001-

PC-17 BOARD
CASS IN SENSOR
CASS DOWN SENSOR
TE-2 BOARD
TAPE END SENSOR
TAPE TOP SENSOR
LMP-5 BOARD
CASSETTE ILLUMINATION
D1-D8 TLY256(YELLOW)
CASSETTE COMPARTMENT
CASSETTE UP SENSOR
UNTHREADING SENSOR
SE-117 BOARD
TAPE END/TOP SENSOR
CL-21 BOARD
SW-435 BOARD
PM001 S-REEL BRAKE SOL
PM002 T-REEL BRAKE SOL
PD-35 BOARD
PM003 CAPSTAN PINCH SOLENOID
CS001 DEW SENSOR
PM004 POTENTIOMETER
LOADING MOTOR
TENSION SENSOR
*1 DM1 DM-230-1
TR-58 BOARD
RM-68 BOARD
SMB-7 BOARD
FLAT CABLE
TAKE-UP REEL MOTOR
CAPSTAN MOTOR
SUPPLY REEL MOTOR
DRUM MOTOR
VIDEO PB HEAD
AUDIO PB HEAD
REC HEAD
ERASE HEAD
DR-90 BOARD
DR-127 BOARD
ROTARY TRANSFORMER
SLIP RING BRUSH
DR-128 BOARD
DR-126 BOARD
ERS HEAD FULL
ERASE HEAD
REC/PB HEAD
AH-22 BOARD
RE-70 BOARD
MD-65
SV-116
SV-115
AE-08
MB-247 BOARD
M01 FAN MOTOR (BOTTOM SIDE)

NOTE:

ADDRESS	MARK	CHANGE INFORMATION	SERIAL NO.
B5	*1	DM1 CHANGED DM-208 → DM-230-1	#10401–

FRAME WIRING

CASSETTE COMPARTMENT
TAPE TRANSPORT

HDV-10(J) ;#10001-
HDV-10(UC) ;#10001-
HDV-10(EK) ;#10001-

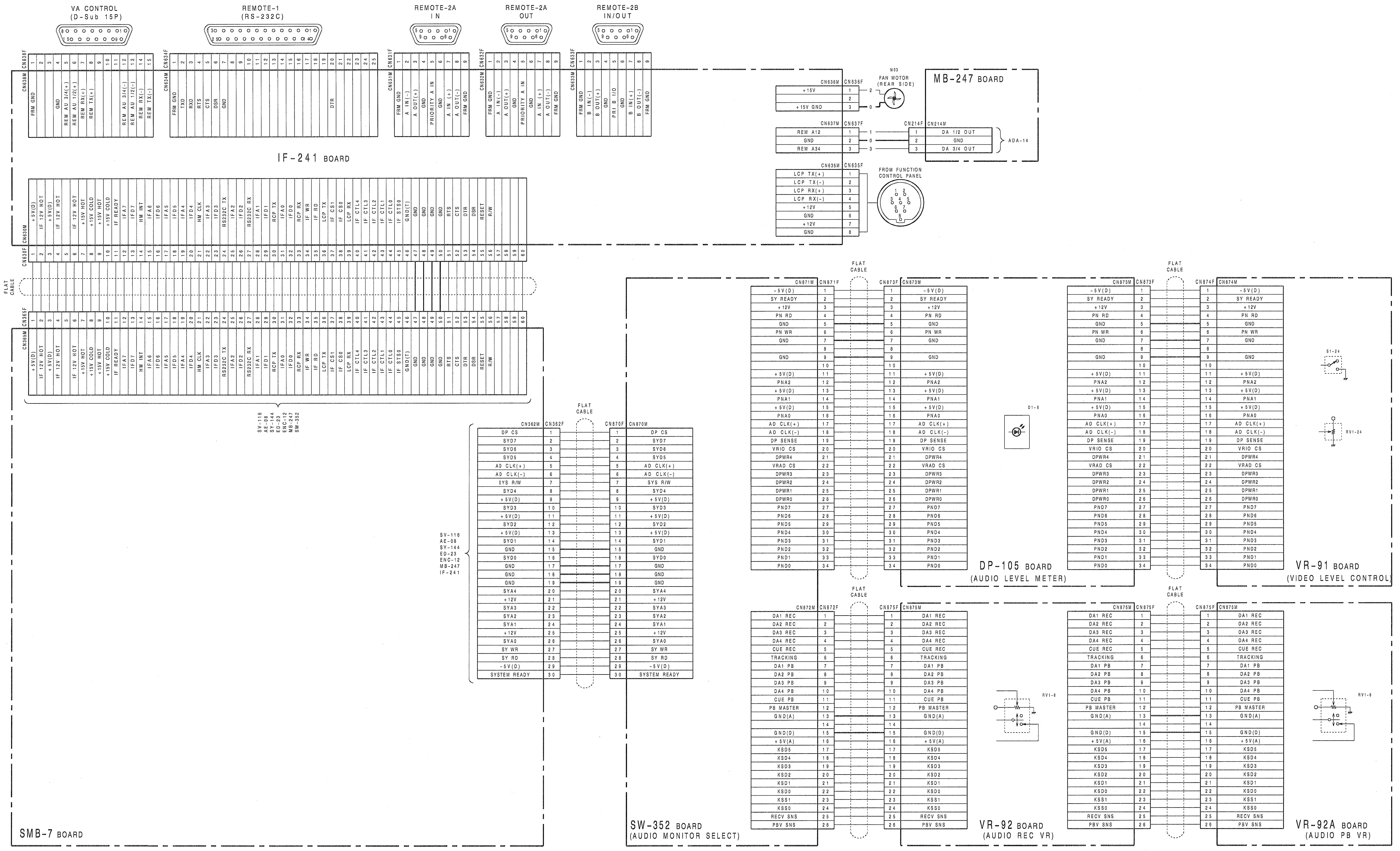
VA CONTROL (D-Sub 15P)
REMOTE-1 (RS-232C)
REMOTE-2A IN
REMOTE-2A OUT
REMOTE-2B IN/OUT
CN638F CN638M
1 FRM GND
4 GND
5 REM AU 3/4(+)
6 REM AU 1/2(+)
7 REM RX(+)
8 REM TX(+)
12 REM AU 3/4(-)
13 REM AU 1/2(-)
14 REM RX(-)
15 REM TX(-)
CN634F CN634M
1 FRM GND
2 TXD
3 RXD
4 RTS
5 CTS
6 DSR
7 GND
20 DTR
CN631F CN631M
1 FRM GND
2 A IN(-)
3 A OUT(+)
4 GND
5 PRIORITY A IN
6 GND
7 A IN (+)
8 A OUT(-)
9 FRM GND
CN632F CN632M
1 FRM GND
2 A IN(-)
3 A OUT(+)
4 GND
5 PRIORITY A IN
6 GND
7 A IN (+)
8 A OUT(-)
9 FRM GND
CN633F CN633M
1 FRM GND
2 B IN(-)
3 B OUT(+)
4 GND
5 PRI B I/O
6 GND
7 B IN(+)
8 B OUT(-)
9 FRM GND
IF-241 BOARD
CN630M CN630F
1 +5V(D)
2 IF 12V HOT
3 +5V(D)
4 IF 12V HOT
6 IF 12V HOT
7 +15V HOT
8 +15V COLD
9 +15V HOT
10 +15V COLD
11 IF READY
12 IFA7
13 IFD7
14 HM INT
15 IFA6
16 IFD6
17 IFA5
18 IFD5
19 IFA4
20 IFD4
21 HM CLK
22 IFA3
23 IFD3
24 RS232C TX
25 IFA2
26 IFD2
27 RS232C RX
28 IFA1
29 IFD1
30 RCP TX
31 IFA0
32 IFD0
33 RCP RX
34 IF WR
35 IF RD
36 LCP TX
37 IF CS1
38 IF CS0
39 LCP RX
40 IF CTL4
41 IF CTL3
42 IF CTL2
43 IF CTL1
44 IF CTL0
45 IF STS0
46 GND(T)
47 GND
48 GND
49 GND
50 GND
51 RTS
52 CTS
53 DTR
54 DSR
55 RESET
56 R/W
FLAT CABLE
CN365F CN365M
1 +5V(D)
2 IF 12V HOT
3 +5V(D)
4 IF 12V HOT
6 IF 12V HOT
7 +15V HOT
8 +15V COLD
9 +15V HOT
10 +15V COLD
11 IF READY
12 IFA7
13 IFD7
14 HM INT
15 IFA6
16 IFD6
17 IFA5
18 IFD5
19 IFA4
20 IFD4
21 HM CLK
22 IFA3
23 IFD3
24 RS232C TX
25 IFA2
26 IFD2
27 RS232C RX
28 IFA1
29 IFD1
30 RCP TX
31 IFA0
32 IFD0
33 RCP RX
34 IF WR
35 IF RD
36 LCP TX
37 IF CS1
38 IF CS0
39 LCP RX
40 IF CTL4
41 IF CTL3
42 IF CTL2
43 IF CTL1
44 IF CTL0
45 IF STS0
46 GND(T)
47 GND
48 GND
49 GND
50 GND
51 RTS
52 CTS
53 DTR
54 DSR
55 RESET
56 R/W
SV-116
AE-08
SY-144
ED-23
ENC-12
MB-247
SW-352
CN636M CN636F
1 +15V
2
3 +15V GND
M03
FAN MOTOR (REAR SIDE)
MB-247 BOARD
CN637M CN637F
1 REM A12
2 GND
3 REM A34
CN214F CN214M
1 DA 1/2 OUT
2 GND
3 DA 3/4 OUT
ADA-14
CN635M CN635F
1 LCP TX(+)
2 LCP TX(-)
3 LCP RX(+)
4 LCP RX(-)
5 +12V
6 GND
7 +12V
8 GND
FROM FUNCTION CONTROL PANEL
CN362M CN362F
FLAT CABLE
CN870F CN870M
1 DP CS
2 SYD7
3 SYD6
4 SYD5
5 AD CLK(+)
6 AD CLK(-)
7 SYS R/W
8 SYD4
9 +5V(D)
10 SYD3
11 +5V(D)
12 SYD2
13 +5V(D)
14 SYD1
15 GND
16 SYD0
17 GND
18 GND
19 GND
20 SYA4
21 +12V
22 SYA3
23 SYA2
24 SYA1
25 +12V
26 SYA0
27 SY WR
28 SY RD
29 -5V(D)
30 SYSTEM READY
SV-116
AE-08
SY-144
ED-23
ENC-12
MB-247
IF-241
SMB-7 BOARD
CN871M CN871F
FLAT CABLE
CN873F CN873M
1 -5V(D)
2 SY READY
3 +12V
4 PN RD
5 GND
6 PN WR
7 GND
8
9 GND
10
11 +5V(D)
12 PNA2
13 +5V(D)
14 PNA1
15 +5V(D)
16 PNA0
17 AD CLK(+)
18 AD CLK(-)
19 DP SENSE
20 VRIO CS
21 DPWR4
22 VRAD CS
23 DPWR3
24 DPWR2
25 DPWR1
26 DPWR0
27 PND7
28 PND6
29 PND5
30 PND4
31 PND3
32 PND2
33 PND1
34 PND0
D1-6
DP-105 BOARD (AUDIO LEVEL METER)
CN873M CN873F
FLAT CABLE
CN874F CN874M
1 -5V(D)
2 SY READY
3 +12V
4 PN RD
5 GND
6 PN WR
7 GND
8
9 GND
10
11 +5V(D)
12 PNA2
13 +5V(D)
14 PNA1
15 +5V(D)
16 PNA0
17 AD CLK(+)
18 AD CLK(-)
19 DP SENSE
20 VRIO CS
21 DPWR4
22 VRAD CS
23 DPWR3
24 DPWR2
25 DPWR1
26 DPWR0
27 PND7
28 PND6
29 PND5
30 PND4
31 PND3
32 PND2
33 PND1
34 PND0
S1-24
RV1-24
VR-91 BOARD (VIDEO LEVEL CONTROL)
CN872M CN872F
FLAT CABLE
CN875F CN875M
1 DA1 REC
2 DA2 REC
3 DA3 REC
4 DA4 REC
5 CUE REC
6 TRACKING
7 DA1 PB
8 DA2 PB
9 DA3 PB
10 DA4 PB
11 CUE PB
12 PB MASTER
13 GND(A)
14
15 GND(D)
16 +5V(A)
17 KSD5
18 KSD4
19 KSD3
20 KSD2
21 KSD1
22 KSD0
23 KSS1
24 KSS0
25 RECV SNS
26 PBV SNS
SW-352 BOARD (AUDIO MONITOR SELECT)
RV1-6
VR-92 BOARD (AUDIO REC VR)
CN875M CN875F
FLAT CABLE
CN875F CN875M
1 DA1 REC
2 DA2 REC
3 DA3 REC
4 DA4 REC
5 CUE REC
6 TRACKING
7 DA1 PB
8 DA2 PB
9 DA3 PB
10 DA4 PB
11 CUE PB
12 PB MASTER
13 GND(A)
14
15 GND(D)
16 +5V(A)
17 KSD5
18 KSD4
19 KSD3
20 KSD2
21 KSD1
22 KSD0
23 KSS1
24 KSS0
25 RECV SNS
26 PBV SNS
RV1-6
VR-92A BOARD (AUDIO PB VR)

FRAME WIRING

LEVEL CONTROL/REMOTE CONTROL

HDV-10(J) ;#10001-
HDV-10(UC) ;#10001-
HDV-10(EK) ;#10001-

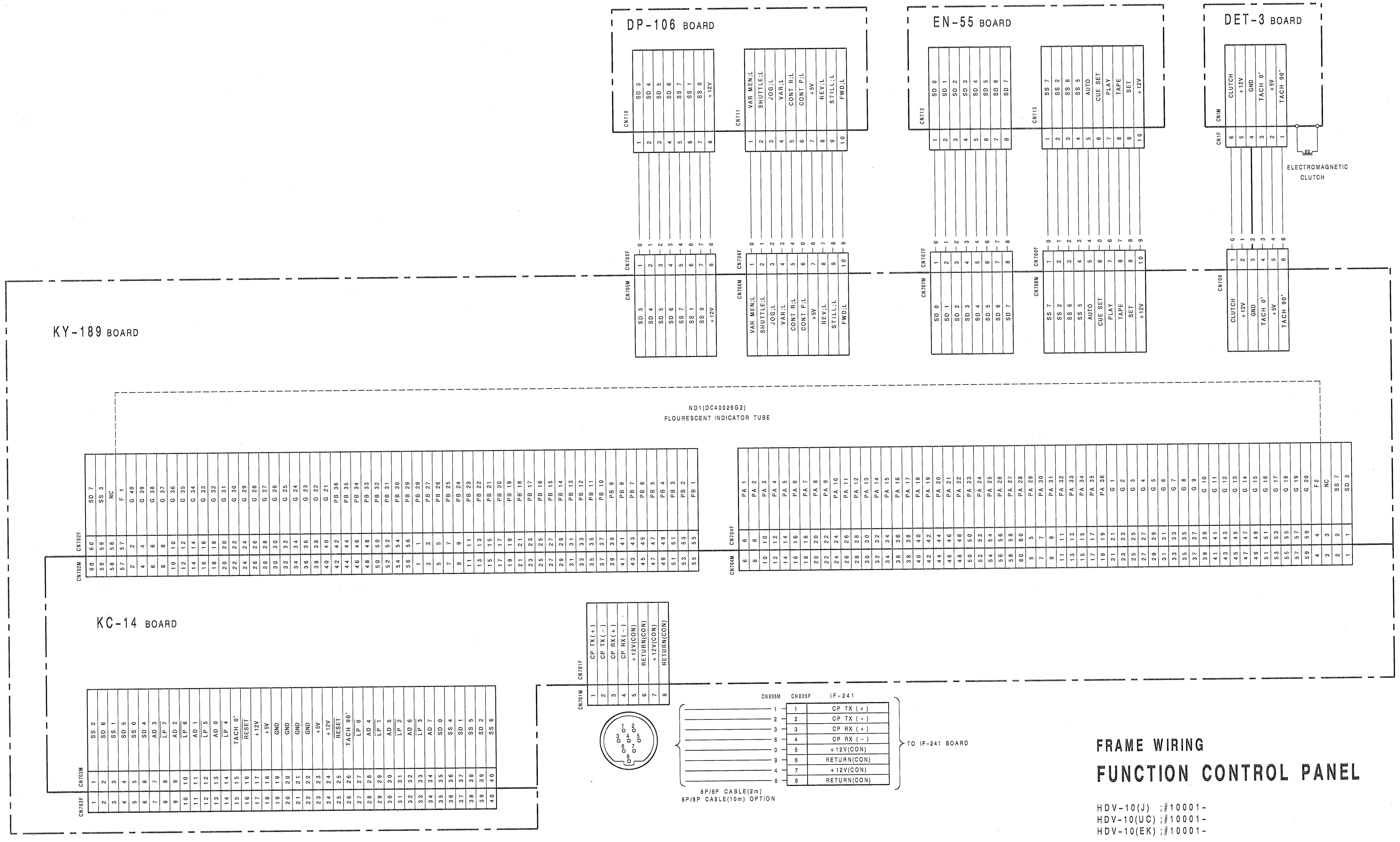
DP-106 BOARD
CN710
SD 3
SD 4
SD 5
SD 6
SS 7
SS 1
SS 0
+12V
CN711
VAR MEN;L
SHUTTLE;L
JOG;L
VAR;L
CONT R;L
CONT P;L
+5V
REV;L
STILL;L
FWD;L
EN-55 BOARD
CN712
SD 0
SD 1
SD 2
SD 3
SD 4
SD 5
SD 6
SD 7
CN713
SS 7
SS 2
SS 6
SS 5
AUTO
CUE SET
PLAY
TAPE
SET
+12V
DET-3 BOARD
CN1M
CN1F
CLUTCH
+12V
GND
TACH 0°
+5V
TACH 90°
ELECTROMAGNETIC CLUTCH
CN705F
CN705M
CN706F
CN706M
CN707F
CN707M
CN708F
CN708M
CN709
KY-189 BOARD
ND1(DC40026G2)
FLOURESCENT INDICATOR TUBE
CN702F
CN702M
CN704F
CN704M
KC-14 BOARD
CN701F
CN701M
CP TX(+)
CP TX(-)
CP RX(+)
CP RX(-)
+12V(CON)
RETURN(CON)
+12V(CON)
RETURN(CON)
CN703M
CN703F
SS 2
SD 6
SS 1
SD 5
SS 0
SD 4
AD 3
LP 7
AD 2
LP 6
AD 1
LP 5
AD 0
LP 4
TACH 0°
RESET
+12V
+5V
GND
GND
+5V
+12V
RESET
TACH 90°
LP 0
AD 4
LP 1
AD 5
LP 2
AD 6
LP 3
AD 7
SD 0
SS 4
SD 1
SS 5
SD 2
SS 6
CN635M
CN635F
IF-241
TO IF-241 BOARD
8P/8P CABLE(2m)
8P/8P CABLE(10m) OPTION

CN635M	CN635F	IF-241
1	1	CP TX (+)
2	2	CP TX (-)
3	3	CP RX (+)
8	4	CP RX (-)
0	5	+12V(CON)
9	6	RETURN(CON)
4	7	+12V(CON)
6	8	RETURN(CON)

FRAME WIRING
FUNCTION CONTROL PANEL

HDV-10(J) ;#10001-
HDV-10(UC) ;#10001-
HDV-10(EK) ;#10001-

CONNECTOR PANEL FRAME WIRING
FRAME WIRING CONNECTOR PANEL
G/Y IN
B/PB IN
R/PR IN
REF SYNC IN
CN601
CN602
CN603
CN604
CN605
CN606
CN607
CN608
G/Y OUT-1
G/Y OUT-2
B/PB OUT-1
B/PB OUT-2
R/PR OUT-1
R/PR OUT-2
SYNC OUT-1
SYNC OUT-2
CN611
CN612
CN613
CN614
CN615
CN616
CN617
CN618
Y MONI OUT
Y/G MONI OUT
PB/B MONI OUT
PR/R MONI OUT
WF SIG OUT
WF TRIG OUT
SPEAR-1 (HD OUT)
SPEAR-2 (VD OUT)
CN621
CN622
CN623
CN624
CN625
CN626
CN627
CN628
A1 IN
A2 IN
A3 IN
A4 IN
A1 OUT
A2 OUT
A3 OUT
A4 OUT
MONITOR R OUT
FOR J MODEL
FOR U/C MODEL
CN641
CN642
CN643
CN644
CN645
CN646
CN647
CN648
CN649
DA1/2 IN
DA3/4 IN
DA1/2 OUT
DA3/4 OUT
CN651
CN652
CN653
CN654
TC IN
TC OUT
CUE IN
CUE OUT
MONITOR L OUT
CN655
CN656
CN657
CN658
CN659
IO-43 BOARD VIDEO IN
IO-44 BOARD VIDEO OUTPUT
IO-53 BOARD (MONITOR OUT)
IO-45 BOARD AUDIO INTERFACE(ANALOG)
IO-46 BOARD AUDIO INTERFACE(DIGITAL)
CN401F CN401M
CN402F CN402M
CN403F CN403M
CN404F CN404M
CN405F CN405M
SMB-8 BOARD
CN201F CN201M
CN202F CN202M
ADA-14
SMB-7
DRUM
IPR-1 DM-77B
SG-169 DM-77A
TBC-15 IV-23
TBC-14 MD-65
MB-247 BOARD
CN211M CN211F
PHONE(L)
PHONE(R)
PHONE(G)
PHONE MUTE
SMB-7
CN212M CN212F
SIRCS(X)
SIRCS(G)
+12V
GND
-12V
POWER CONT
POWER SUPPLY
CN876F CN876M
CN878F CN878M
J1 PHONE OUT
J2 SIRCS IN
VR-93 BOARD
CN877M CN877F
CN915F CN915M
PS-190 BOARD
SW1
NC
RED
NO
GRN
1
2
3
4
5
A
B
C
D
E
F
G
H
I
J
K
L
M
N
O

FRAME WIRING

CONNECTOR PANEL

HDV-10(J) ;#10001-
HDV-10(UC) ;#10001-
HDV-10(EK) ;#10001-

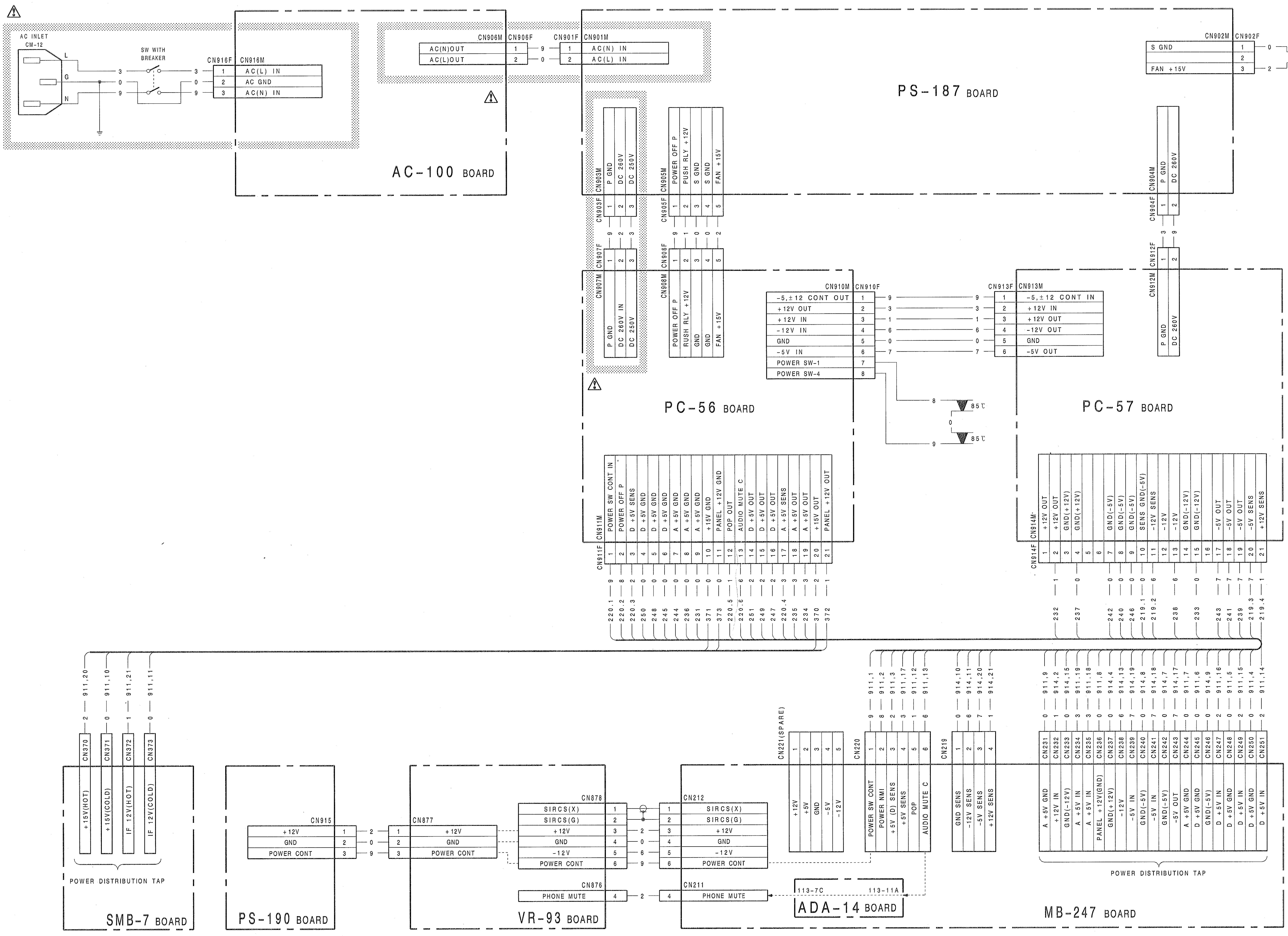
AC INLET
CM-12
L
G
N
SW WITH
BREAKER
CN916F
CN916M
AC(L) IN
AC GND
AC(N) IN
AC-100 BOARD
CN906M
CN906F
CN901F
CN901M
AC(N)OUT
AC(L)OUT
AC(N) IN
AC(L) IN
PS-187 BOARD
CN902M
CN902F
S GND
FAN +15V
M02
FAN MOTOR
(REAR SIDE)
CN903M
P GND
DC 260V
DC 250V
CN903F
CN905M
POWER OFF P
PUSH RLY +12V
S GND
S GND
FAN +15V
CN905F
CN904M
P GND
DC 260V
CN904F
CN907F
CN907M
P GND
DC 260V IN
DC 250V
CN908F
CN908M
POWER OFF P
PUSH RLY +12V
GND
GND
FAN +15V
CN910M
CN910F
-5,±12 CONT OUT
+12V OUT
+12V IN
-12V IN
GND
-5V IN
POWER SW-1
POWER SW-4
85℃
85℃
CN913F
CN913M
-5,±12 CONT IN
+12V IN
+12V OUT
-12V OUT
GND
-5V OUT
CN912F
CN912M
P GND
DC 260V
PC-56 BOARD
PC-57 BOARD
CN911M
CN911F
POWER SW CONT IN
POWER OFF P
D +5V SENS
D +5V GND
D +5V GND
D +5V GND
A +5V GND
A +5V GND
A +5V GND
+15V GND
PANEL +12V GND
POP OUT
AUDIO MUTE C
D +5V OUT
D +5V OUT
A +5V SENS
A +5V OUT
+15V OUT
PANEL +12V OUT
CN914M
CN914F
+12V OUT
GND(+12V)
GND(+12V)
GND(-5V)
GND(-5V)
GND(-5V)
SENS GND(-5V)
-12V SENS
-12V
-12V
GND(-12V)
GND(-12V)
-5V OUT
-5V OUT
-5V OUT
-5V SENS
+12V SENS
CN370
CN371
CN372
CN373
+15V(HOT)
+15V(COLD)
IF 12V(HOT)
IF 12V(COLD)
POWER DISTRIBUTION TAP
SMB-7 BOARD
CN915
+12V
GND
POWER CONT
PS-190 BOARD
CN877
+12V
GND
POWER CONT
CN878
SIRCS(X)
SIRCS(G)
+12V
GND
-12V
POWER CONT
CN876
PHONE MUTE
VR-93 BOARD
CN212
SIRCS(X)
SIRCS(G)
+12V
GND
-12V
POWER CONT
CN211
PHONE MUTE
113-7C
113-11A
ADA-14 BOARD
CN221(SPARE)
+12V
+5V
GND
-5V
-12V
CN220
POWER SW CONT
POWER NMI
+5V (D) SENS
+5V SENS
POP
AUDIO MUTE C
CN219
GND SENS
-12V SENS
-5V SENS
+12V SENS
CN231
CN232
CN233
CN234
CN235
CN236
CN237
CN238
CN239
CN240
CN241
CN242
CN243
CN244
CN245
CN246
CN247
CN248
CN249
CN250
CN251
A +5V GND
+12V IN
GND(-12V)
A +5V IN
A +5V IN
PANEL +12V(GND)
GND(+12V)
-12V
-5V IN
GND(-5V)
-5V IN
GND(-5V)
-5V OUT
A +5V GND
D +5V GND
GND(-5V)
D +5V IN
D +5V GND
D +5V IN
D +5V GND
D +5V IN
POWER DISTRIBUTION TAP
MB-247 BOARD
911,20
911,10
911,21
911,11
911,1
911,2
911,3
911,17
911,12
911,13
914,10
914,11
914,20
914,21
911,9
914,2
914,15
911,19
911,18
911,8
914,4
914,13
914,19
914,8
914,18
914,7
914,17
911,7
911,6
914,9
911,16
911,15
911,4
911,14
220.1
220.2
220.3
250
248
245
244
236
231
371
373
220.5
220.6
251
249
247
220.4
235
234
370
372
232
237
242
240
246
219.1
219.2
238
233
243
241
239
219.3
219.4
A
B
C
D
E
F
G
H
1
2
3
4
5

FRAME WIRING
POWER SUPPLY

HDV-10(J) ;#10001-
HDV-10(UC) ;#10001-
HDV-10(EK) ;#10001-

HDV-10 (J, UC, EK)
3-167-411-06 Volume-2

Sony Corporation
Broadcast Products Group

Printed in Japan
1993. 8 08
© 1991
Published by Broadcast Products Group